Baseband Schematic

1. Contents
2. Block Diagramm
3. SOC PWR1
4. SOC PWR2
5. SOC PWR3
6. SOC Interface1
7. SOC Interface1
8. SOC RF Interface
9. SOC GND
10. PMU LDO
11. PMU DC-DC
12. PMU Digital
13. eMMC and DDR3
14. Battery & Fuel guage
15. USB/Charging/Switch
16. LCD Interface
17. Flash LED
18. Camera Interface
19. Reserved
20. Codec/MIC/RCV
21. Audio/SPK/VIB
22. Headphone
23. Reserved
24. Reserved
25. X-Sensor1
26. X-Sensor2
27. External DC/DC
28. SIM/uSD Card
29. FPC Interface
30. Test Point/Shielding

کانال ما در تلگرام

@JahanIC

MODEM Schematic

31. RF Interface
32. RF PMU
33. RF Transceiver
34. Reserved
35. Reserved
36. Reserved
37. RF Front End LW B1/B2/B3/B5/B8 TRX
38. RF Front End MMMBPA+Switch /Main
39. RF Front End MAIN ANT TUNNER
40. Reserved
41. Reserved
42. TCXO
43. Reserved for CDMA Modem
44. Reserved for CDMA Modem
45. Reserved for CDMA Modem
46. Reserved for CDMA Modem
47. Reserved for CDMA Modem
48. Reserved for CDMA Modem
49. RESERVED
50. RESERVED
51. Reserved
52. BT/WLAN/FM/NFC
53. BT/WLAN/FM/NFC
54. WIFI_RF_FrontEnd_2.4GHz
55. WIFI_RF_FrontEnd_5GHz
56. GPS
57. Reserved
58. RF Transceiver2
59. RFIC2_GSM PA+Switch+RX
60. RF PMU2

The type and specification of the components refer to the BOM

					09-09-2014_15:45
					20140523
				ECA NO	DATE
DESIGNED	liumingwu 00241889	SeattleUL			
REVIEWED	wangweijie 00122033				
		VER	PART_NUMBER	SHEET 1 OF 60	
				HUAWEI TECH CO.,LTD.	

2. Block Diagramm

The type and specification of the components refer to the BOM

					30-08-2014_14:56
					20140523
				ECA NO	DATE
DESIGNED	liumingwu 00241889	SeattleUL			
REVIEWED	wangweijie 00122033				
		VER	PART_NUMBER	SHEET 2 OF 60	
				HUAWEI TECH CO.,LTD.	

3. SOC PWR1

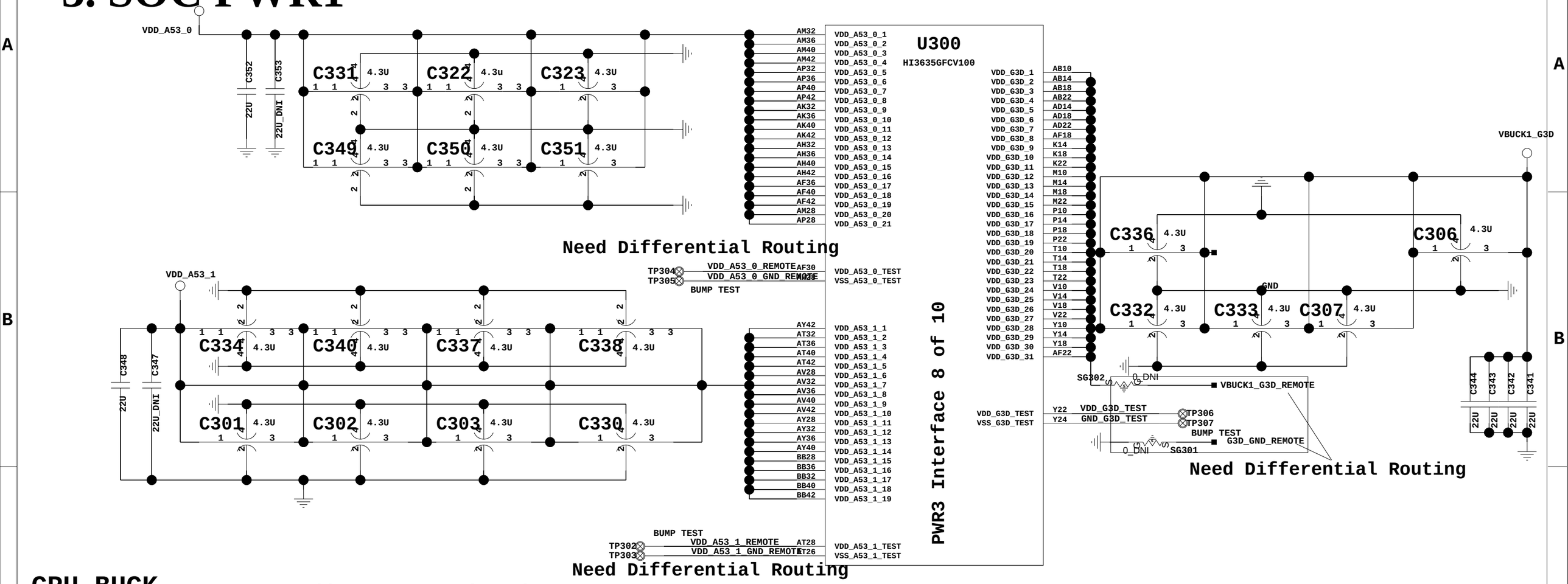

CPU BUCK

I2C address=1100000(0x60)

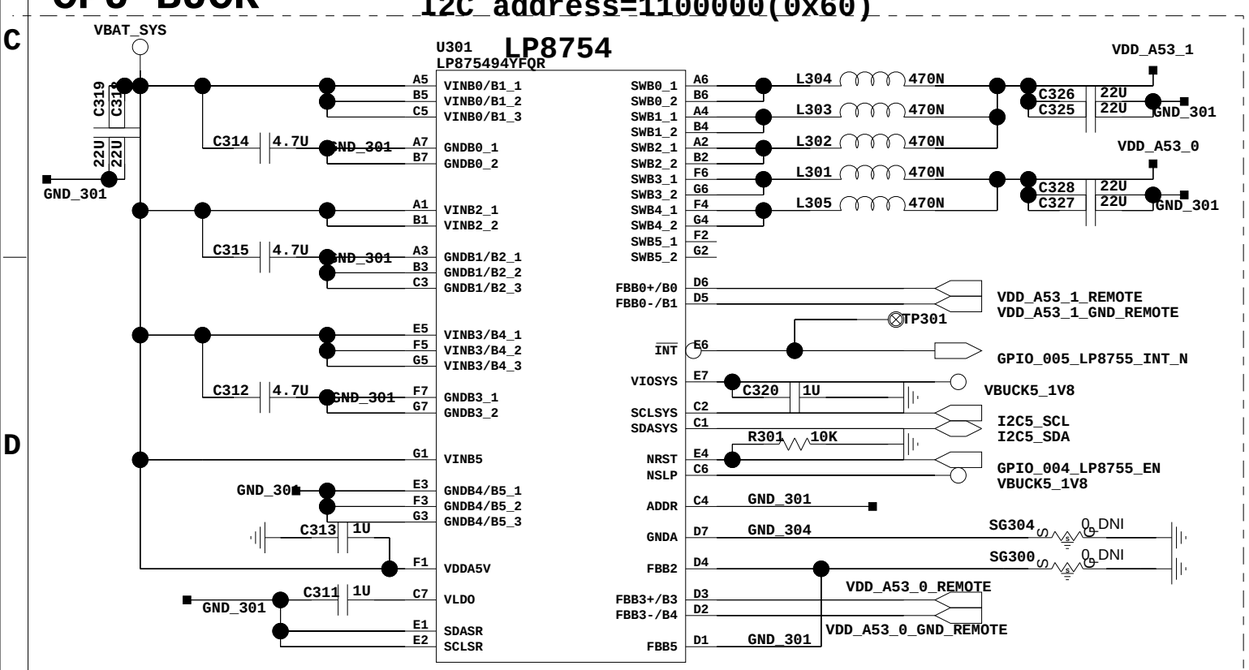

کانال ما در تلگرام

@JahanIC

The type and specification of the components refer to the BOM

					11-12-2014_09:46
				TBD For	20140523
				ECA NO	DATE
DESIGNED	liumingwu/00241889	Seattle+UL		00001234	
REVIEWED	Linda Parts number	Review			
		VER	PART_NUMBER	SHEET 3 OF 60	
		Ver.A	03011DVT	HUAWEI TECH CO.,LTD.	

4. SOC PWR2

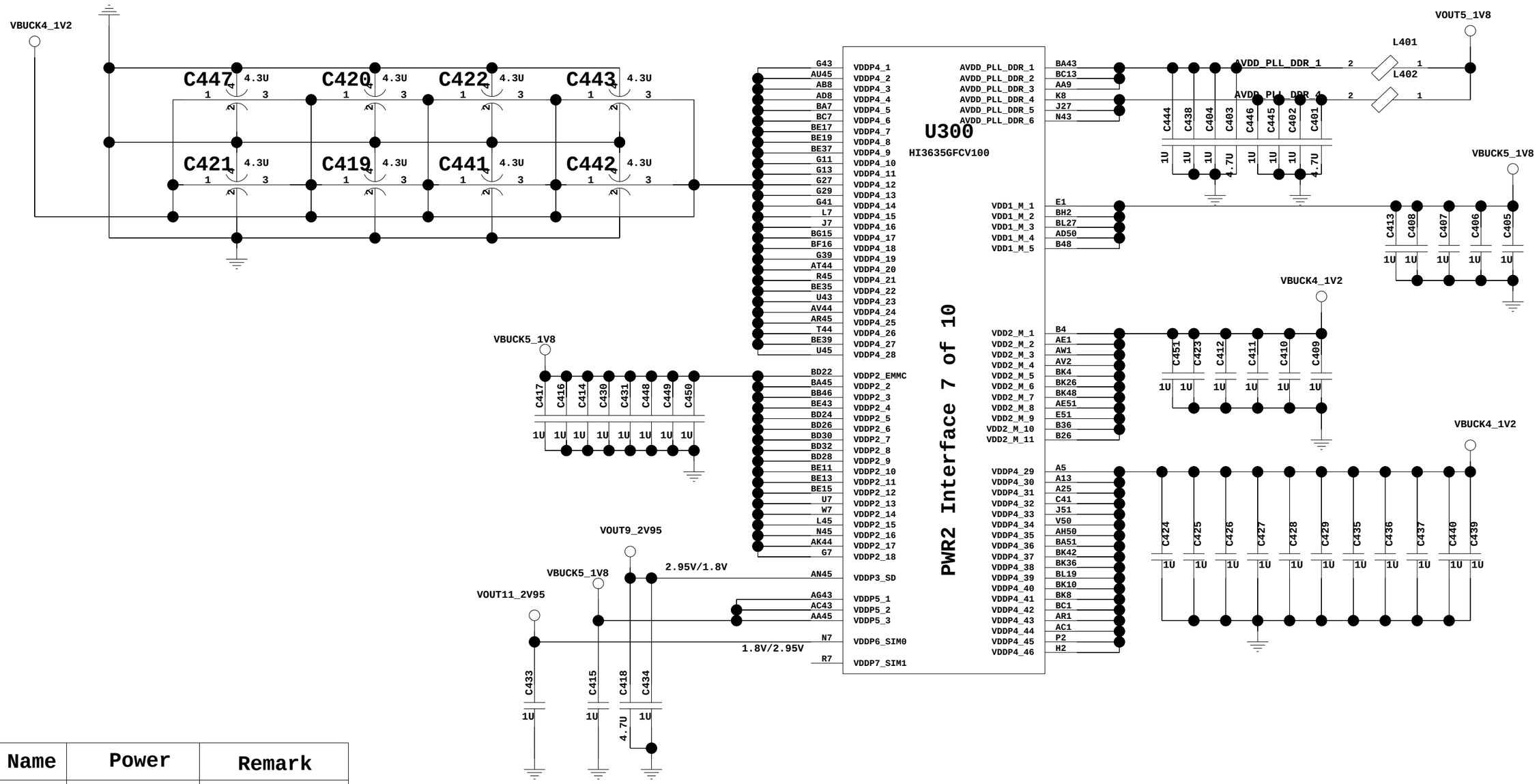

Name	Power	Remark
VDDP2	1.8V	OTHER I/O
VDDP3	2.95V/1.8V	SD I/F I/O
VDDP4	1.2V	DDR I/O
VDDP5	1.8V	SYSTEM I/O
VDDP6	1.8V/2.95V	USIM0 I/O
VDDP7	1.8V/2.95V	USIM1 I/O

The type and specification of the components refer to the BOM

					03-12-2014_19:18
				TBD For	20140523
				ECA NO	DATE
DESIGNED	dairenjun/00200164	Linda_CUL		03022NKM_SCHZH	
REVIEWED	Linda Parts number Review				
		VER	PART_NUMBER	SHEET 4	OF 60
		Ver.A	03011DVT	HUAWEI TECH CO.,LTD.	

5. SOC PWR3

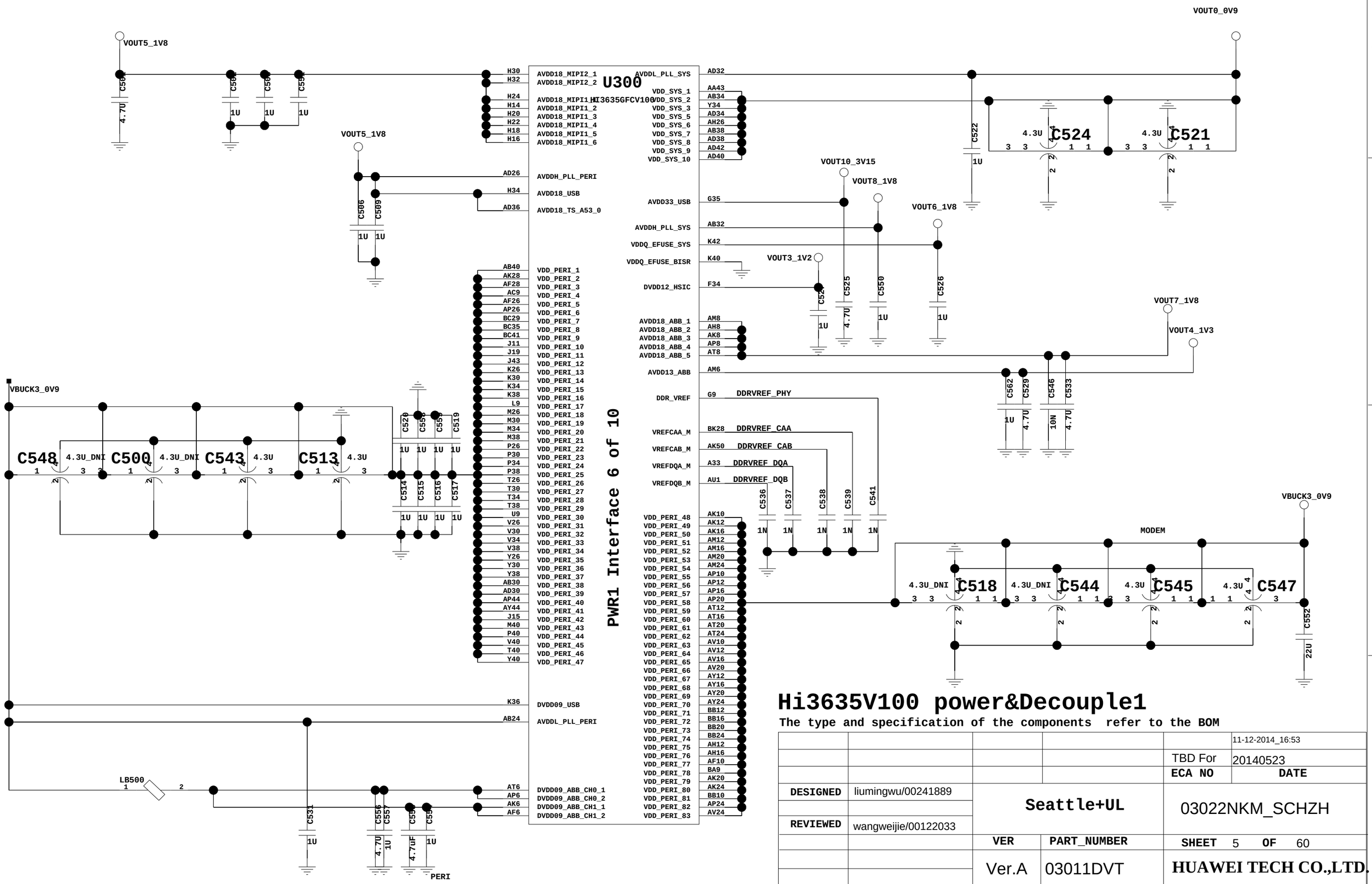

Hi3635V100 power&Decouple1

The type and specification of the components refer to the BOM

					11-12-2014_16:53
				TBD For	20140523
				ECA NO	DATE
DESIGNED	liumingwu/00241889	Seattle+UL		03022NKM_SCHZH	
REVIEWED	wangweijie/00122033				
		VER	PART_NUMBER	SHEET 5 OF 60	
		Ver.A	03011DVT	HUAWEI TECH CO.,LTD.	

6. SOC Interface1

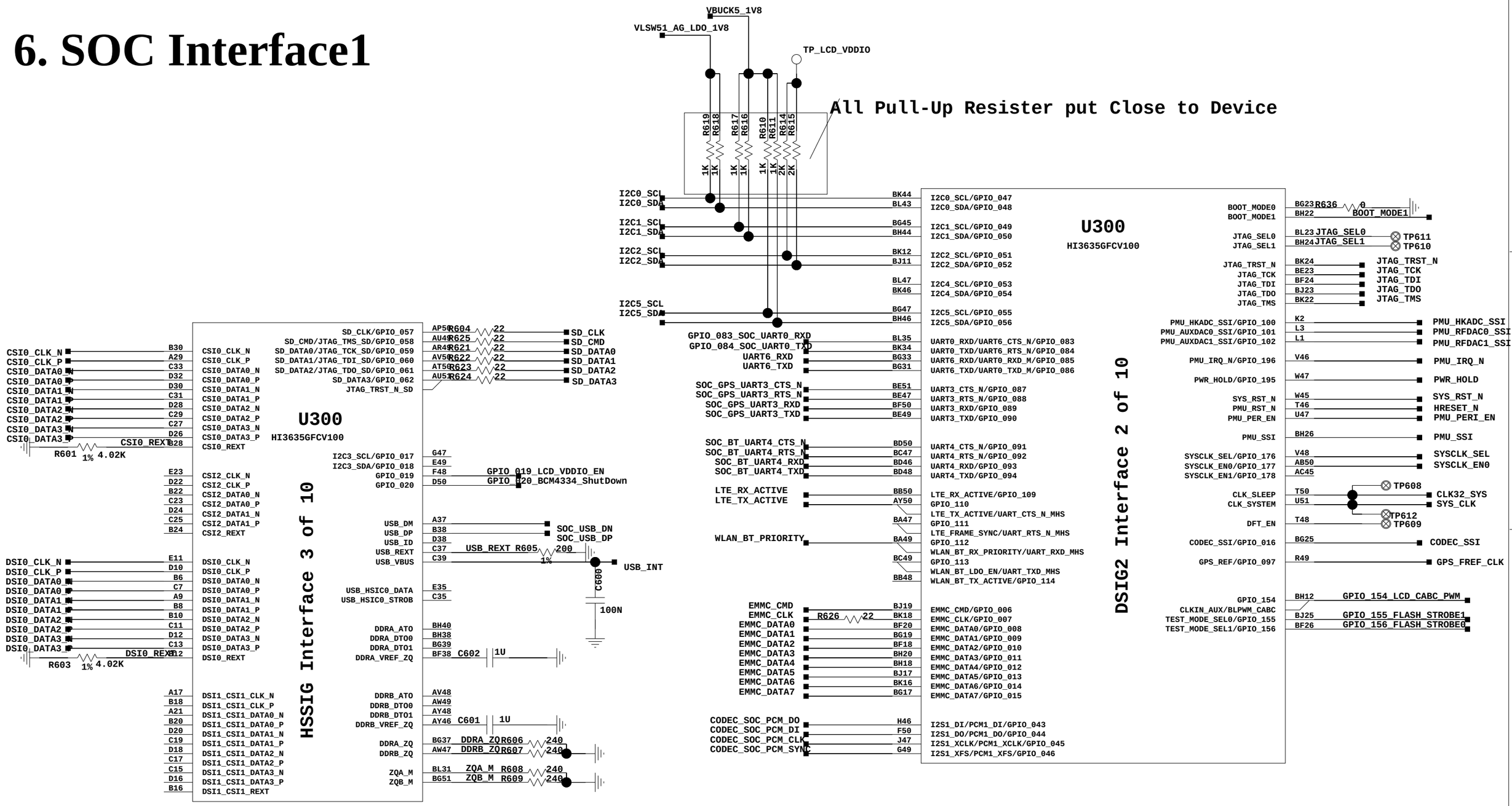

Hi3630v100 high speed siganl

The type and specification of the components refer to the BOM

Boot_mode[1:0]	Function
00	Bootrom start-Download
01	Bootrom start-FAC Test
10	Bootrom start-eMMC
11	EX-Nand Boot only for ATE

JTAG Selection setting

SEL1(IPD)	SEL0(IPU)	FUNCTION
0	0	BSD TAP Controller
0	1	DJTAG TAP Controller
1	0	CoreSight & DSP JTAG
1	1	AUTH JTAG

					12-12-2014_13:40
				TBD For	20140523
				ECA NO	DATE
DESIGNED	dairenjun/00200164	Linda_CUL		03022NKM_SCHZH	
REVIEWED	Linda Parts number	Review			
		VER	PART_NUMBER	SHEET 6 OF 60	
		Ver.A	03011DVT	HUAWEI TECH CO.,LTD.	

7.SOC Interface2

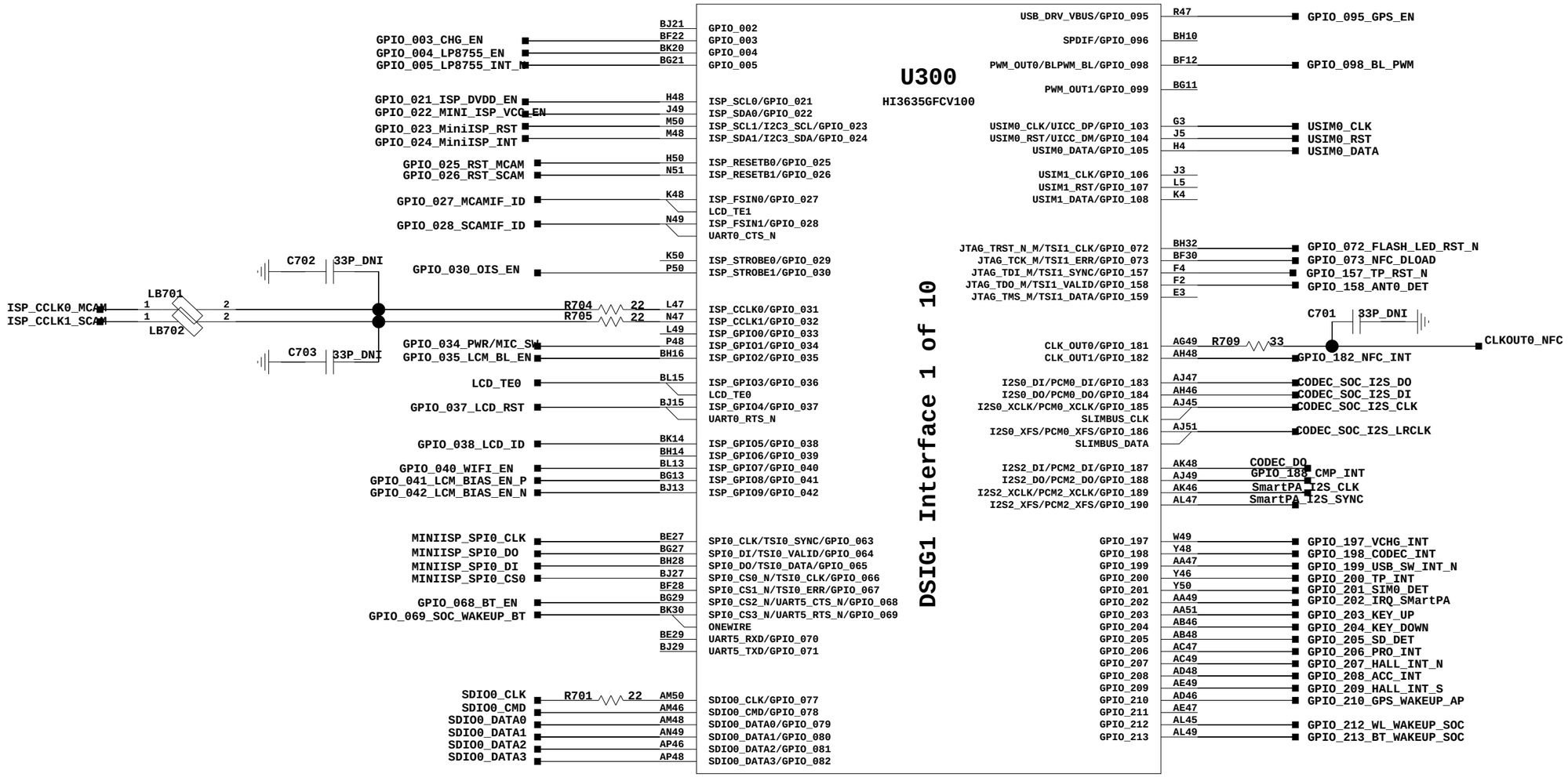

کانال ما در تلگرام

@JahanIC

The type and specification of the components refer to the BOM

					10-01-2015_12:06
				TBD For	20140523
				ECA NO	DATE
DESIGNED	dairenjun/00200164	Linda_CUL		03022NKM_SCHZH	
REVIEWED	Linda Parts number	Review			
		VER	PART_NUMBER	SHEET 7 OF 60	
		Ver.A	03011DVT	HUAWEI TECH CO.,LTD.	

8. SOC RF Interface

ANTPA_SEL0-5 AND ANTPA_SEL25-30 Can Not Used FOR PA Enable

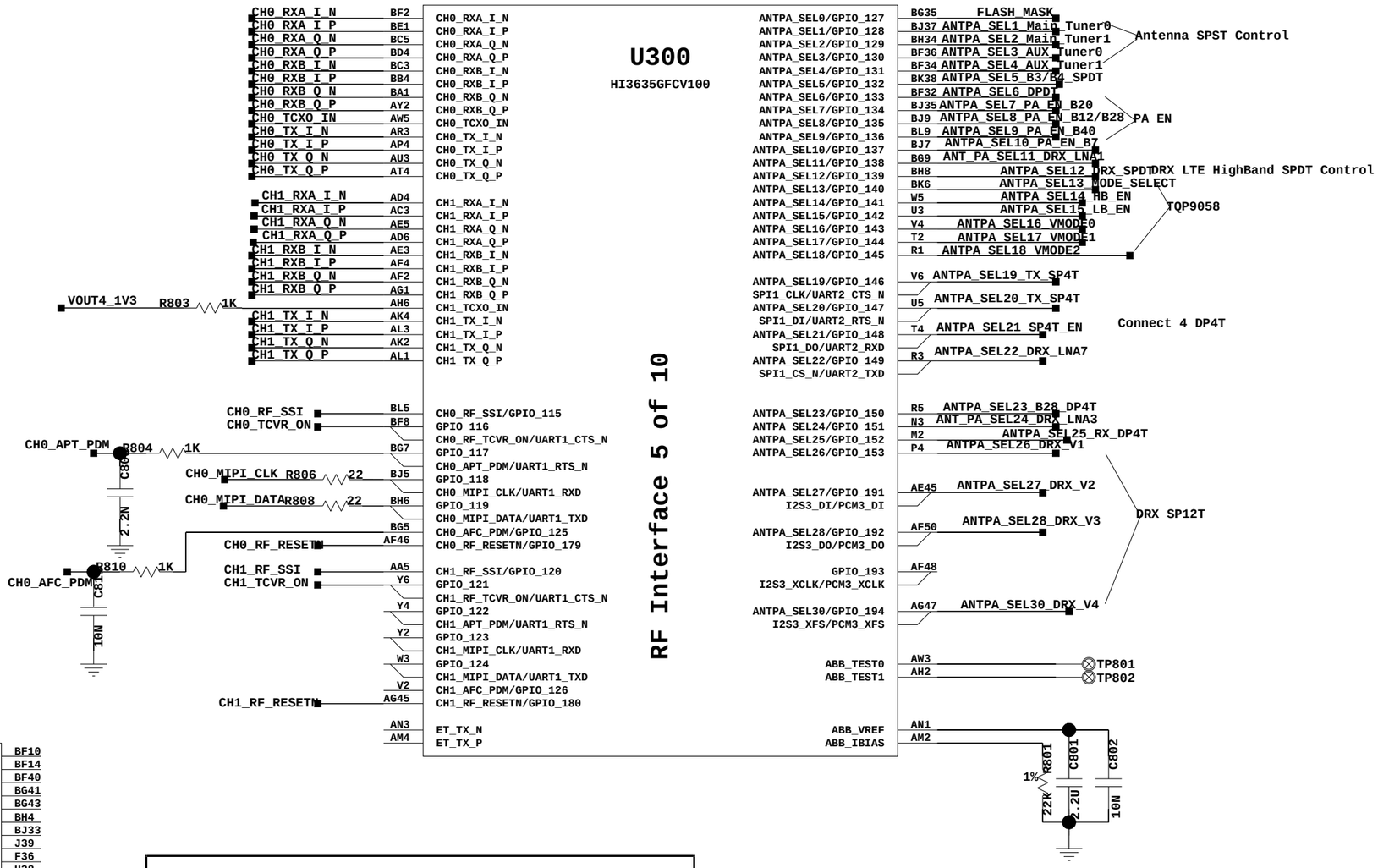

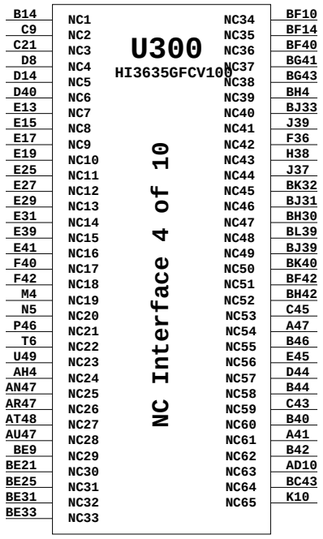

کانال ما در تلگرام

@JahanIC

The type and specification of the components refer to the BOM

					10-01-2015_12:06
				TBD For	20140523
				ECA NO	DATE
DESIGNED	dairenjun/00200164	Linda_CUL		03022NKM_SCHZH	
REVIEWED	Linda Parts number Review				
		VER	PART_NUMBER	SHEET 8	OF 60
		Ver.A	03011DVT	HUAWEI TECH CO.,LTD.	

9. SOC GND

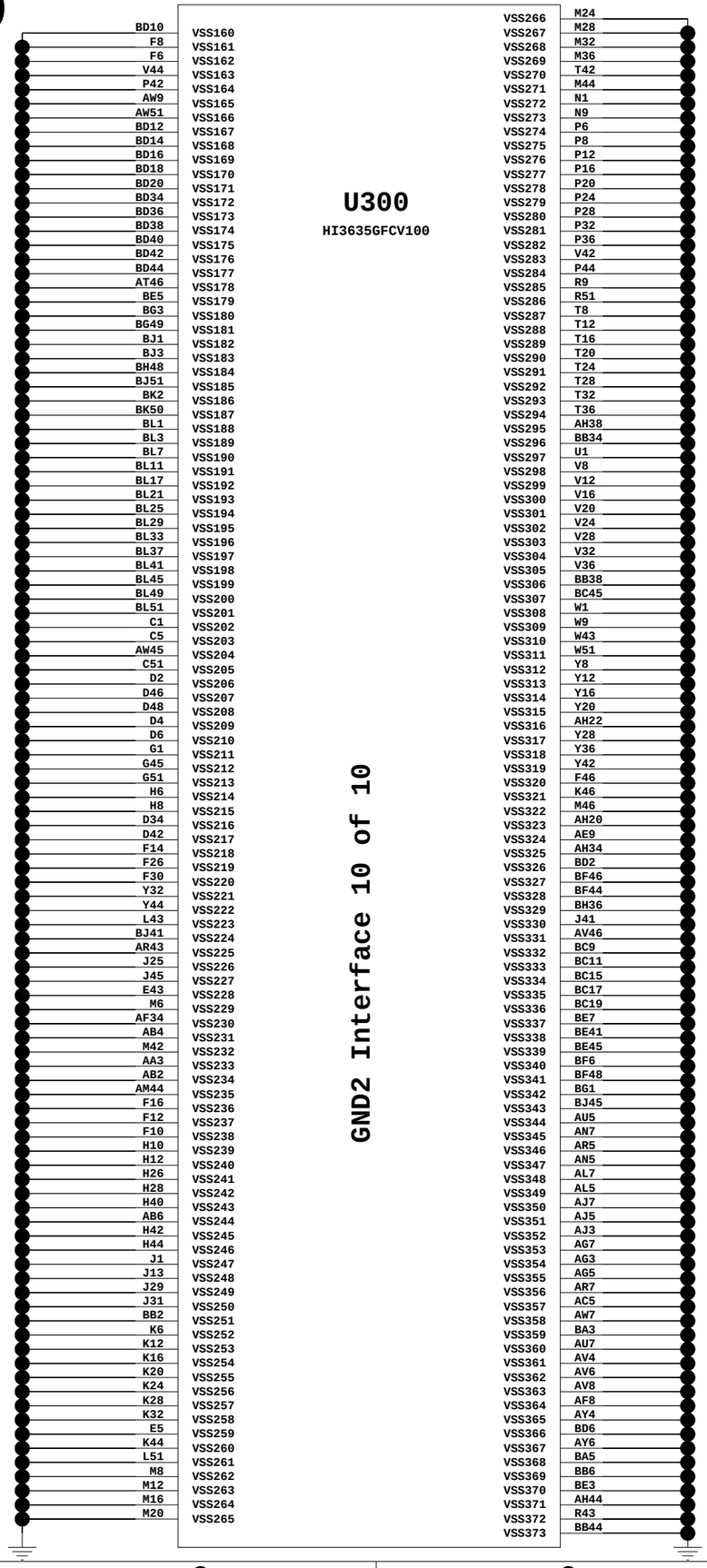

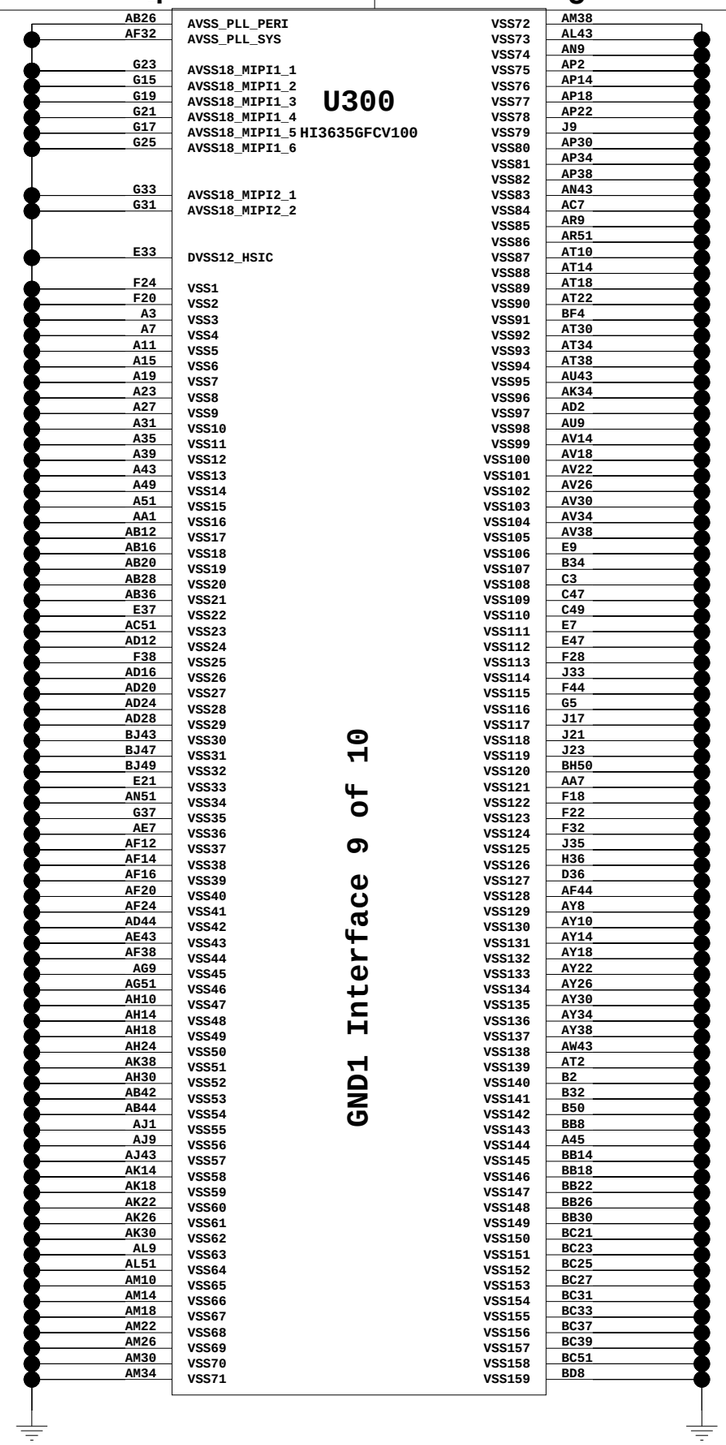

The type and specification of the components refer to the BOM

					03-12-2014_19:18
				TBD For	20140523
				ECA NO	DATE
DESIGNED	dairenjun/00200164	Linda_CUL		03022NKM_SCHZH	
REVIEWED	Linda Parts number	Review			
		VER	PART_NUMBER	SHEET 9 OF 60	
		Ver.A	03011DVT	HUAWEI TECH CO.,LTD.	

10. PMU LDO

Power Management Table

NAME	Voltage	Current	Function
VDD_A53_0	0.9V	3.7A	A53 LITTLE core
VDD_A53_1	0.9V	6.5A	A53 BIG core
VBUCK1/2	0.9V	6.0A	GPU core
VBUCK3	0.9V	3.0A	PERI & MDM & BBP
VBUCK4	1.2V	3.0A	DDR & 1.2V power plane
VBUCK5	1.8V	1.5A Hi3635	I/O & 1.8V power plane
VBUCK6	2.15V	1.5A	2.15V power plane
VOUT0	0.9V	300mA	Hi3635 SYS + 0.9V PLL
VOUT1	0.9V	350mA	NC
VOUT2	0.9V	800mA	NC
VOUT3	1.2V	50mA	HSIC
VOUT4	1.3V	100mA	AVDDL_ABB
VOUT5	1.8V	500mA	PHY 1.8V POWER
VOUT6	1.8V	150mA	EFUSE
VOUT7	1.8V	100mA	AVDDH_ABB & AVDD1P8_PLL
VOUT8	1.8V	300mA	CODEC 1.8V analog
VOUT9	2.95V/1.8V	50mA	Hi3635 SD CARD I/O
VOUT10	3.15V	50mA	USB PHY
VOUT11	1.8V/2.95V	50mA	SIM 0
VOUT12	1.8V/2.95V	50mA	
VOUT13	2.85V	50mA	19.2M TCXO 0 & BUFFER
VOUT14	2.85V	50mA	19.2M TCXO 1 & BUFFER
VOUT15	2.95V	350mA	EMMC AVDD
VOUT16	2.85V	600mA	SD CARD
VOUT17	3.1V	50mA	TP AVDD
VOUT18	2.5V	50mA	HKADC REF
VOUT19	2.8V	200mA	S_CAM analog
VOUT20	1.0V	350mA	M_CAM core
VOUT21	2.8V	200mA	M_CAM analog
VOUT22	1.2V	200mA	
VOUT23	3.0V	50mA	HKADC & AUX DAC
VOUT24	2.8V	50mA	X-Sensor AVDD
VOUT25	2.85V	300mA	MCAM VCM
VOUT26	1.8V	50mA	19.2M circuit & CLK buffer
VOUT_FELICA	3.15V	100mA	NFC
VBOOST	5.0V	1.5A/600mA	CLASS-D PA
VLSW50	1.8V	50mA	LCD_TP I/O
VLSW51	1.8V	50mA	IRDA I/O
VLSW52	1.8V	60mA	CAM I/O
VLSW53	1.8V	50mA	PA VDD_EN

IN7 Power for LDO_PMUD/Felica/25/26/VCOIN
VIN_1P2 Power for LDO0_2/LDO1/LDO2
VIN_1P8 Power for LDO3/4/LDO20/LDO22
VIN_1P8 Power for LSW50-LSW53
VIN_2P15 Power for LDO5-LDO8
VIN_3P3 Power for LDO9-19/21/23/24

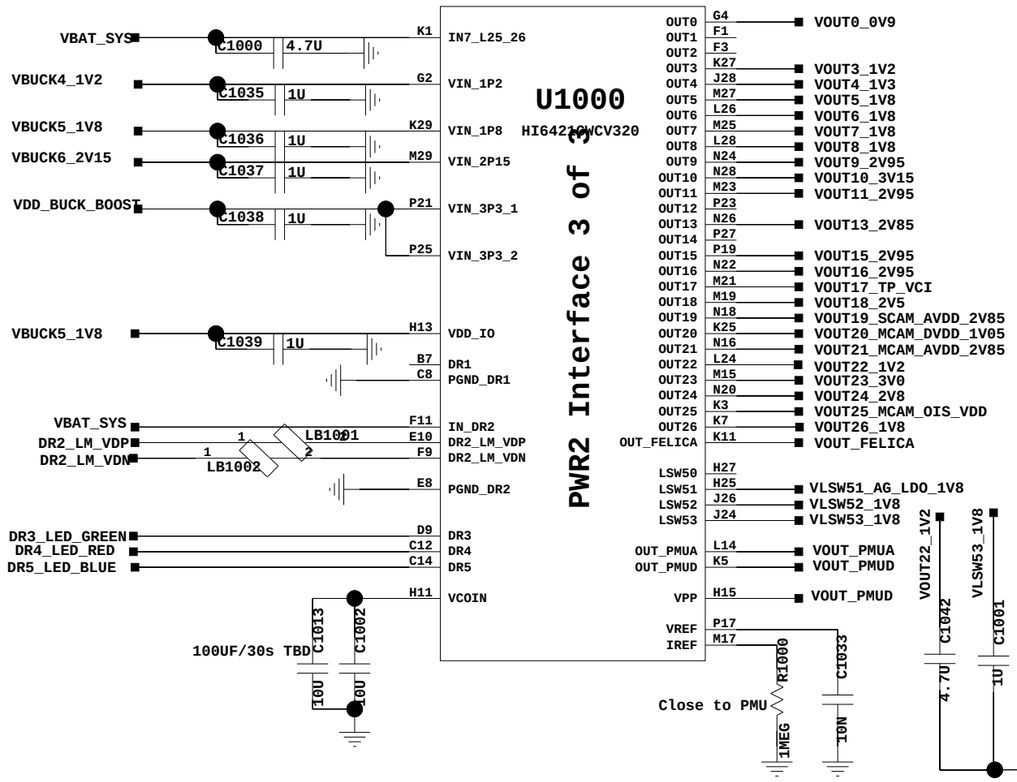

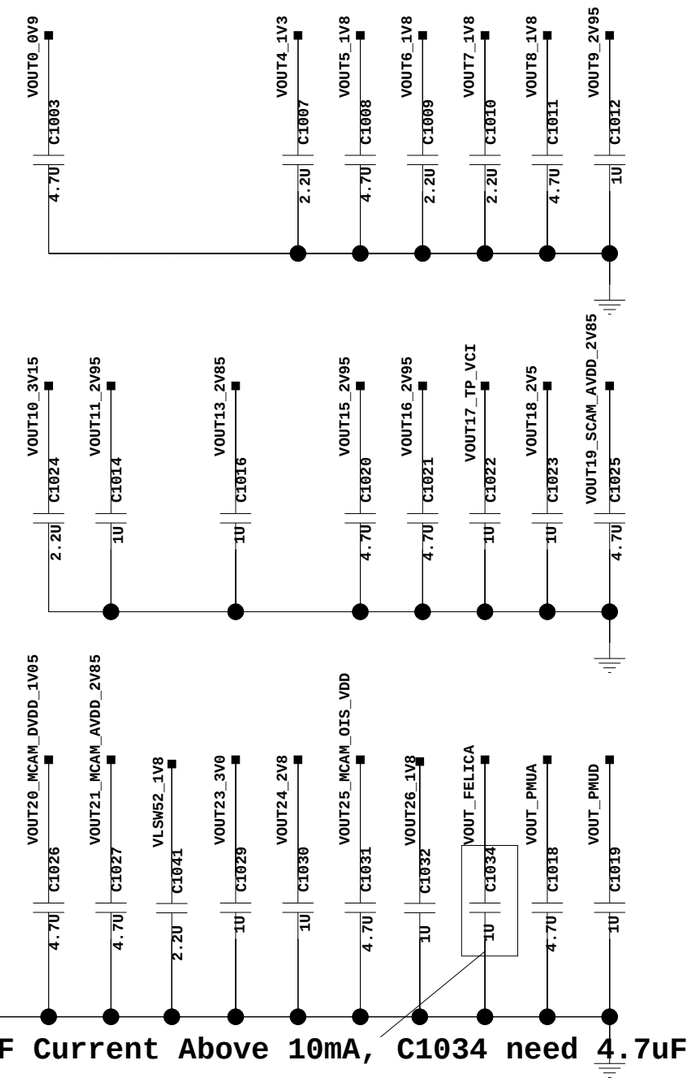

کانال ما در تلگرام

@JahanIC

Hi6421 Power Management

The type and specification of the Components refer to the BOM

					13-01-2015_14:29
				TBD For	20140523
				ECA NO	DATE
DESIGNED	dairenjun/00200164	Linda_CUL		03022NKM_SCHZH	
REVIEWED	Linda Parts number Review				
		VER	PART_NUMBER	SHEET 10 OF 60	
		Ver.A	03011DVT	HUAWEI TECH CO.,LTD.	

11. PMU DC-DC

کانال ما در تلگرام

@JahanIC

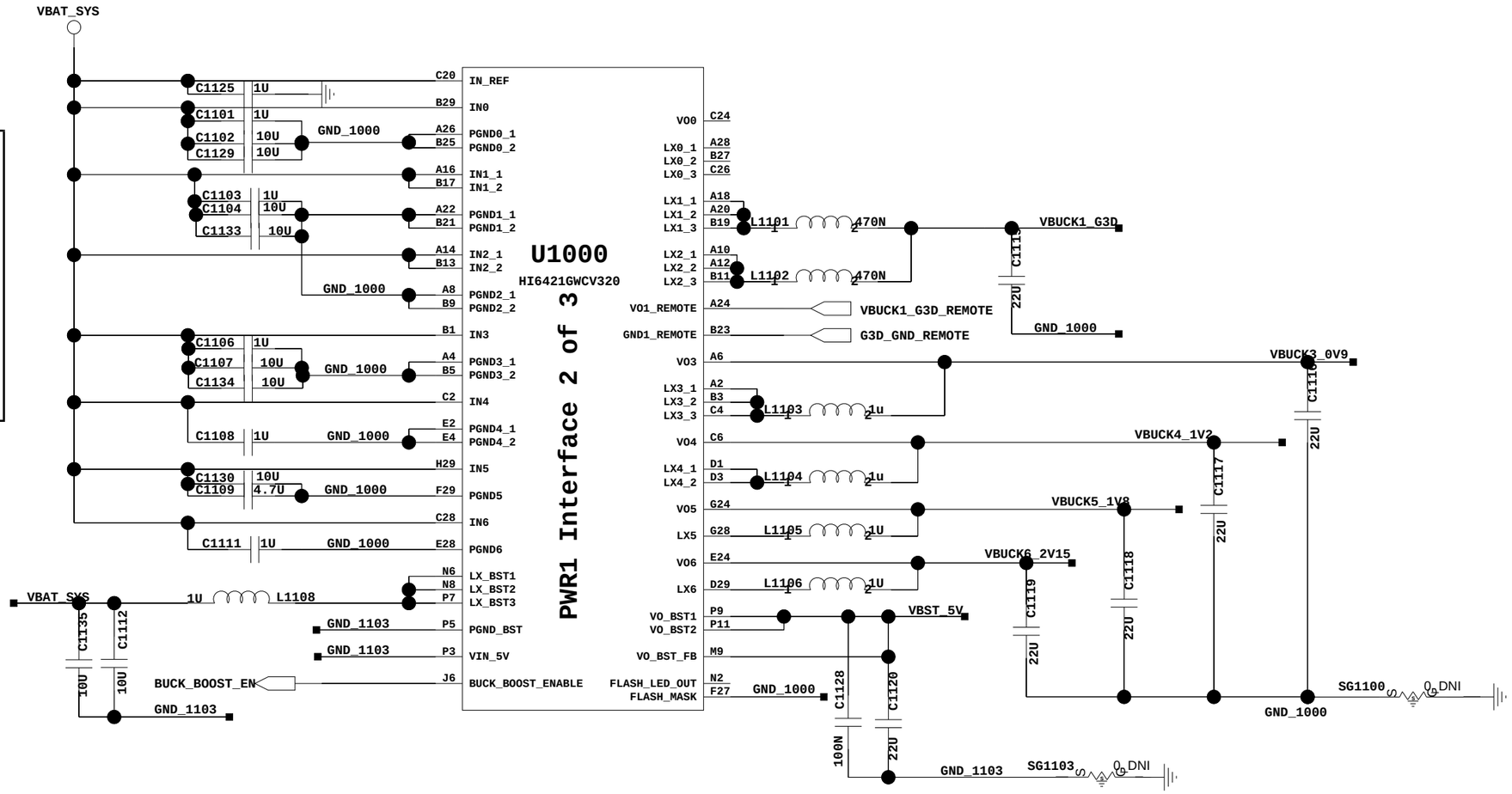

BUCK BOOST

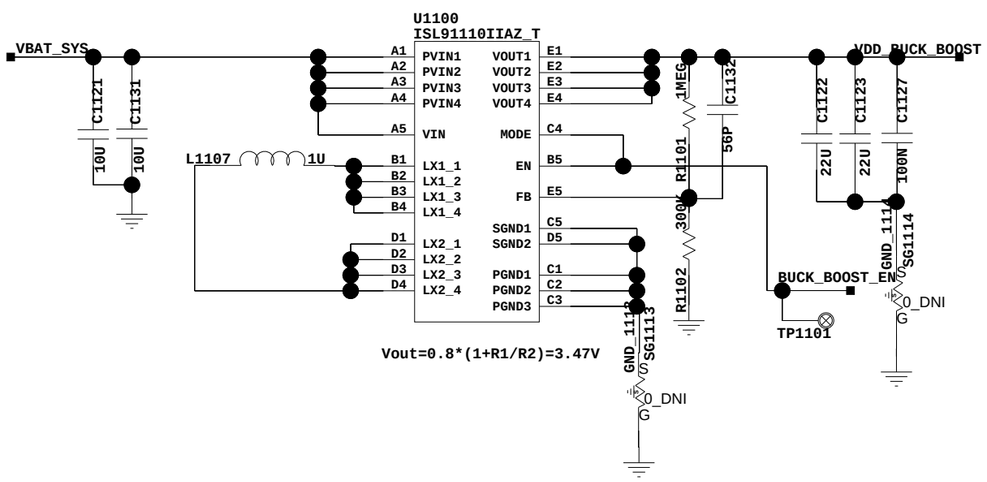

The type and specification of the components refer to the BOM

					11-12-2014_16:54
				TBD For	20140523
				ECA NO	DATE
DESIGNED	dairenjun/00200164	Linda_CUL		03022NKM_SCHZH	
REVIEWED	Linda Parts number Review				
		VER	PART_NUMBER	SHEET 11 OF 60	
		Ver.A	03011DVT	HUAWEI TECH CO.,LTD.	

12. PMU Digital

HKADC Table

NAME	Function
HKADC_IN0	board ID detect0
HKADC_IN1	board ID detect1
HKADC_IN2	board ID detect2
HKADC_IN3	detect temperature of AP
HKADC_IN4	detect LCD_VSP
HKADC_IN5	
HKADC_IN6	battery ID
HKADC_IN7	detect temperature of Battery
HKADC_IN8	detect temperature of RFIC2 PA
HKADC_IN9	detect Flash Led temperature
HKADC_IN10	detect TP_LCD_VDDIO
HKADC_IN11	detect temperature of RFIC1 PA
HKADC_IN12	detect temperature of Charge IC
HKADC_IN13	
HKADC_IN14	detect transceiver1 PA power
HKADC_IN15	

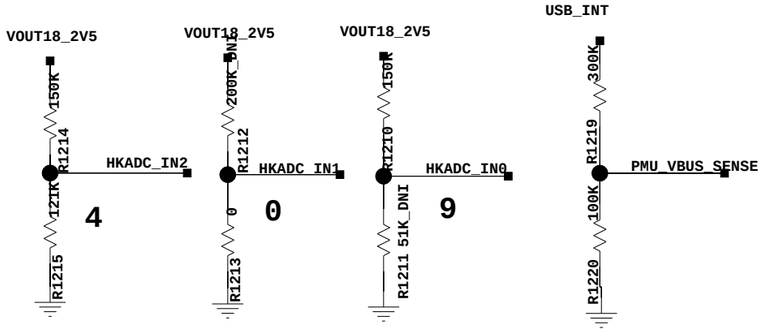

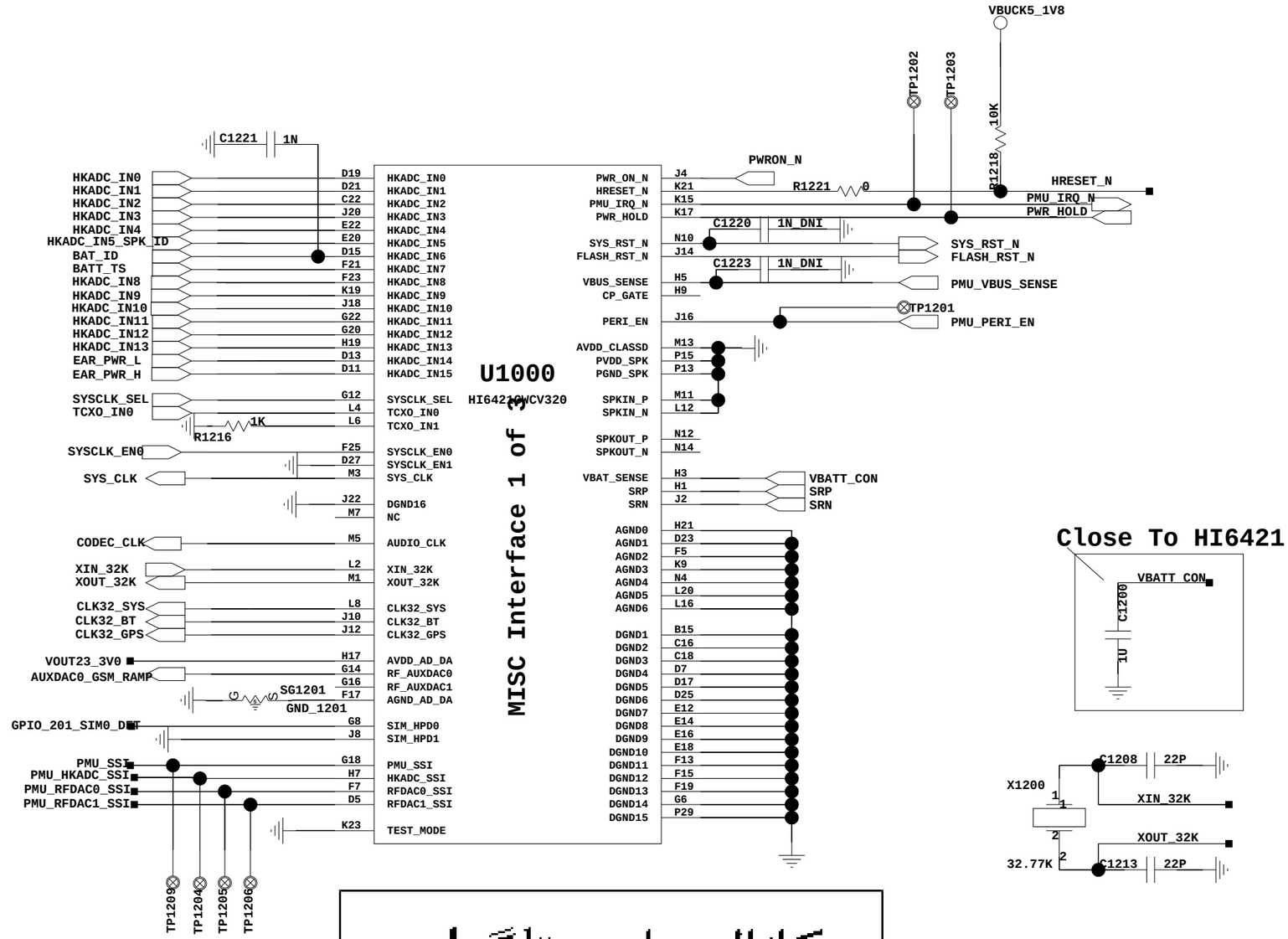

کانال ما در تلگرام

@JahanIC

UL V0/VA	0X402	6402ES
UL VB	0X409	6402CS R1211=DNI

The type and specification of the components refer to the BOM

					08-01-2015_23:59
				TBD For	20140523
				ECA NO	DATE
DESIGNED	dairenjun/00200164	Linda_CUL		03022NKM_SCHZH	
REVIEWED	Linda Parts number	Review			
		VER	PART_NUMBER	SHEET 12 OF 60	
		Ver.A	03011DVT	HUAWEI TECH CO.,LTD.	

13. eMMC AND LpDDR3

کانال ما در تلگرام

@JahanIC

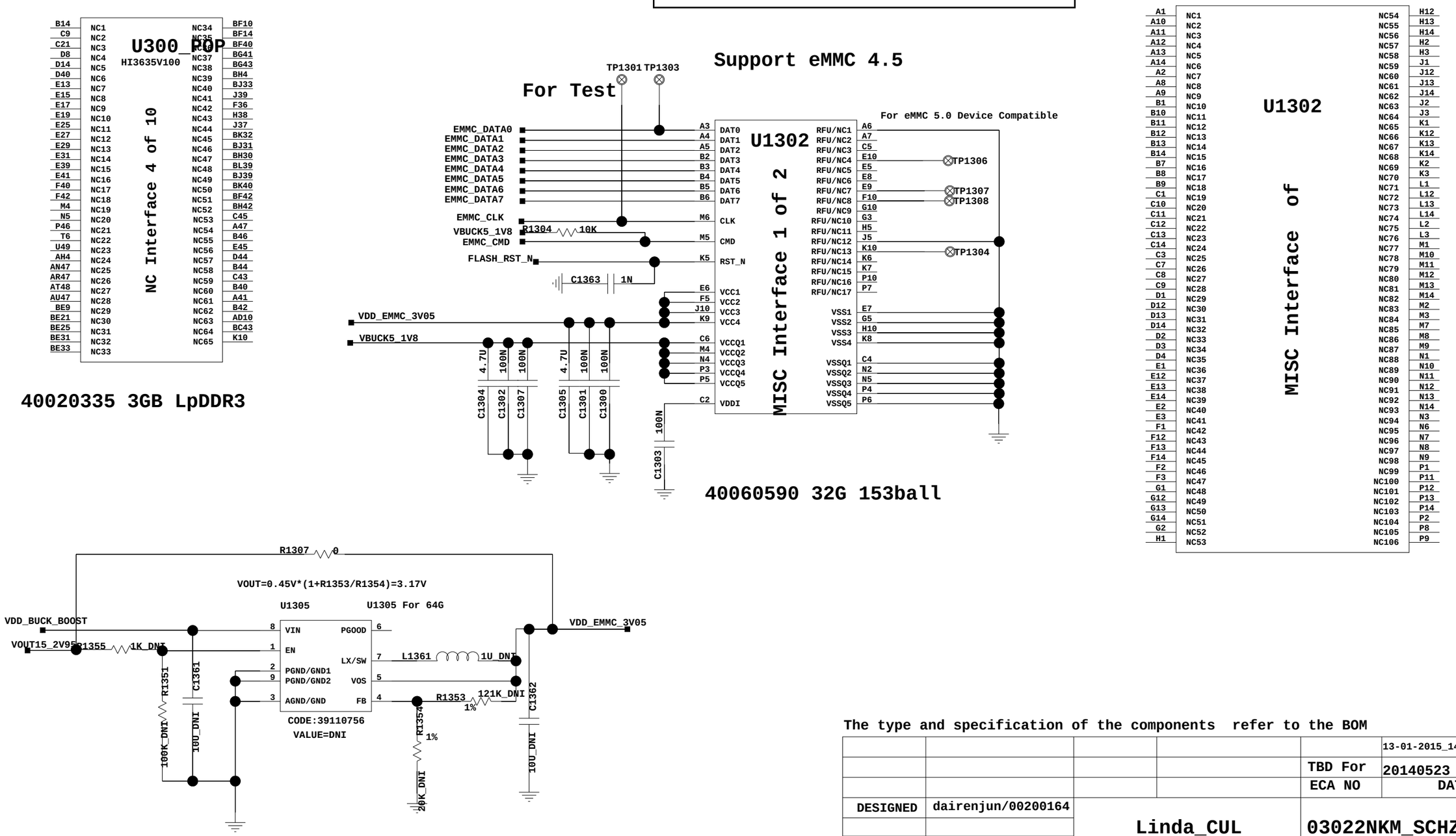

The type and specification of the components refer to the BOM

					13-01-2015_14:29
				TBD For	20140523
				ECA NO	DATE
DESIGNED	dairenjun/00200164	Linda_CUL		03022NKM_SCHZH	
REVIEWED	Linda Parts number	Review			
		VER	PART_NUMBER	SHEET 13 OF 60	
		Ver.A	03011DVT	HUAWEI TECH CO.,LTD.	

14. Battery & Fuel guage

Battery Connector

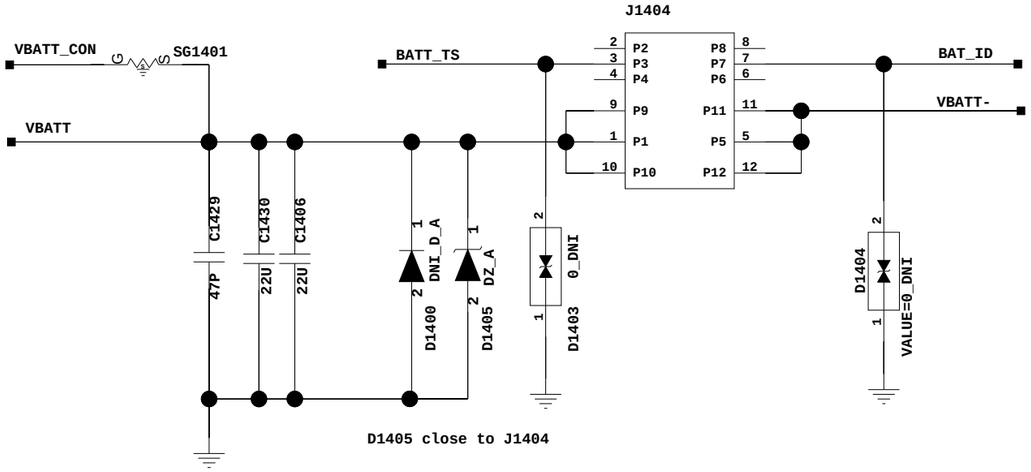

CAD NOTE:RF filter components layout close to PMU(U1000)

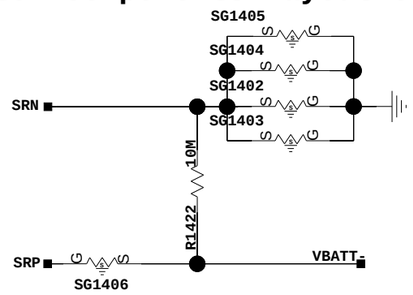

CAD note: differential trace

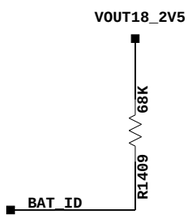

Battery ID

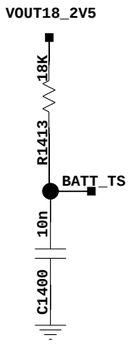

Battery Temperature

کانال ما در تلگرام

@JahanIC

The type and specification of the components refer to the BOM

				NA	20140523
				ECA NO	DATE
DESIGNED	LISHANSHAN 00192600	Linda_CUL		03022AQQ_SCHZH	
REVIEWED	Linda Parts number	Review			
		VER	PART_NUMBER	SHEET 14 OF 60	
		A	03022AQQ	HUAWEI TECH CO.,LTD.	

15. Charge Management

کانال ما در تلگرام
@JahanIC

USB/MHL/UART SWITCH

I2C address=0100101(0x25)

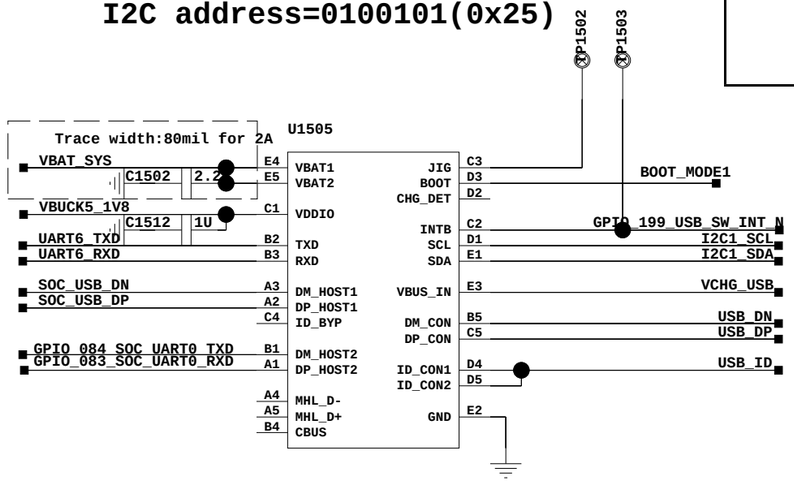

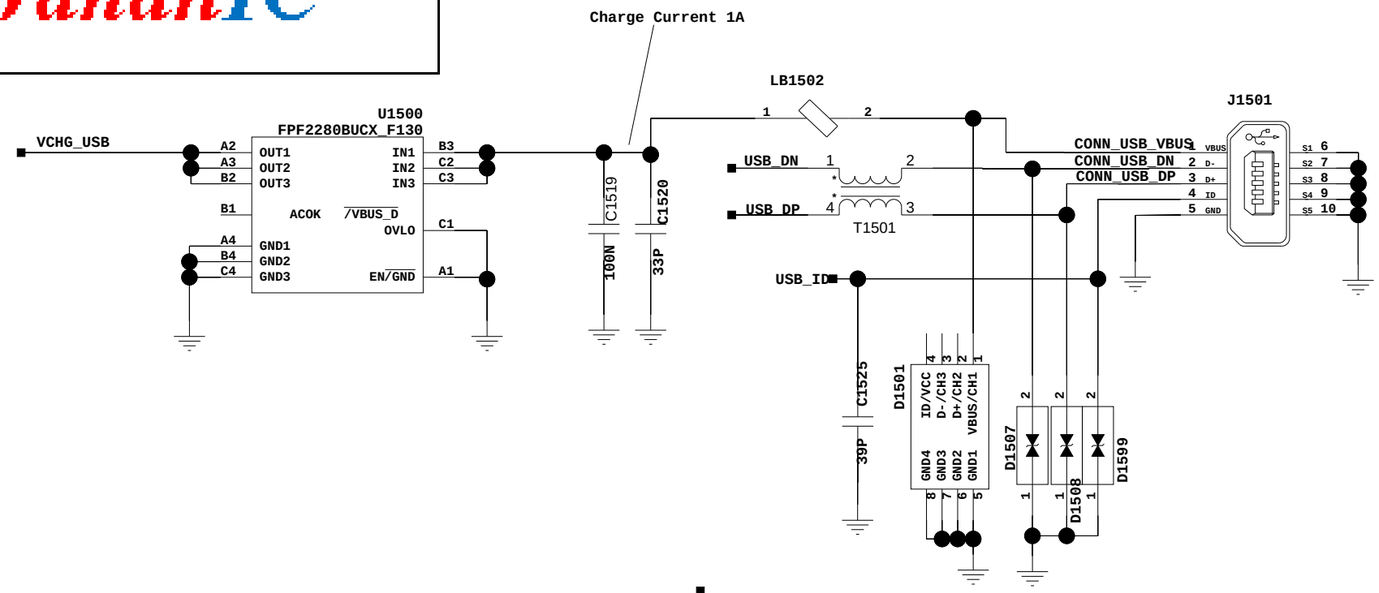

Charger IC

I2C address=1101011b(0x6B)

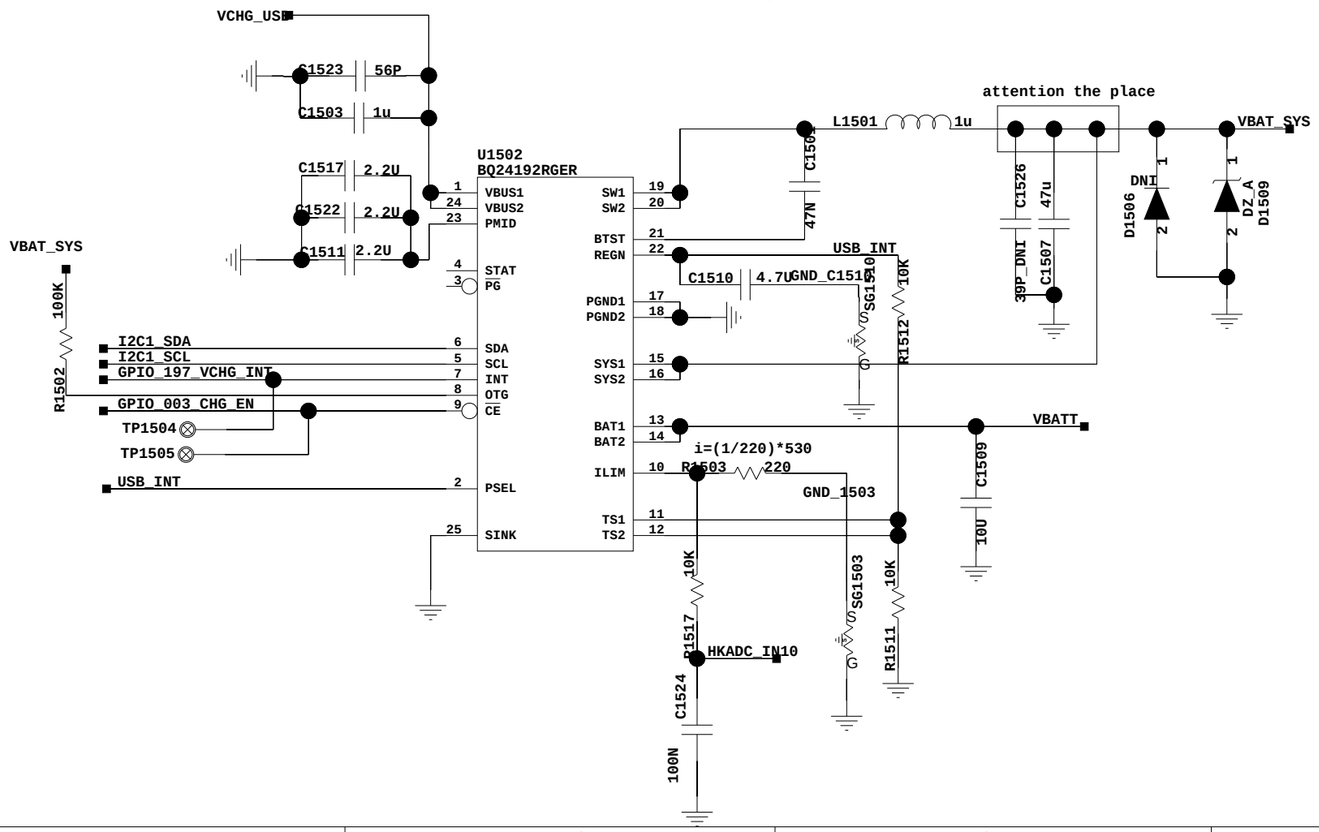

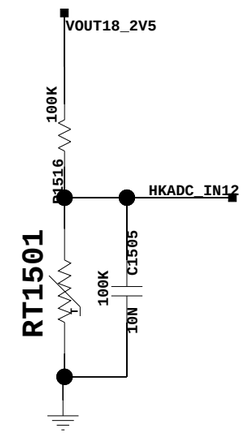

The type and specification of the components refer to the BOM

					12-12-2014_10:46
					20140523
				ECA NO	DATE
DESIGNED	wangjing/50646				
			Linda_CUL		
REVIEWED	Linda Parts number	Review			
		VER	PART_NUMBER	SHEET 15 OF 60	
				HUAWEI TECH CO.,LTD.	

16. LCD Interface

LCD POS/NEG Voltage Driver

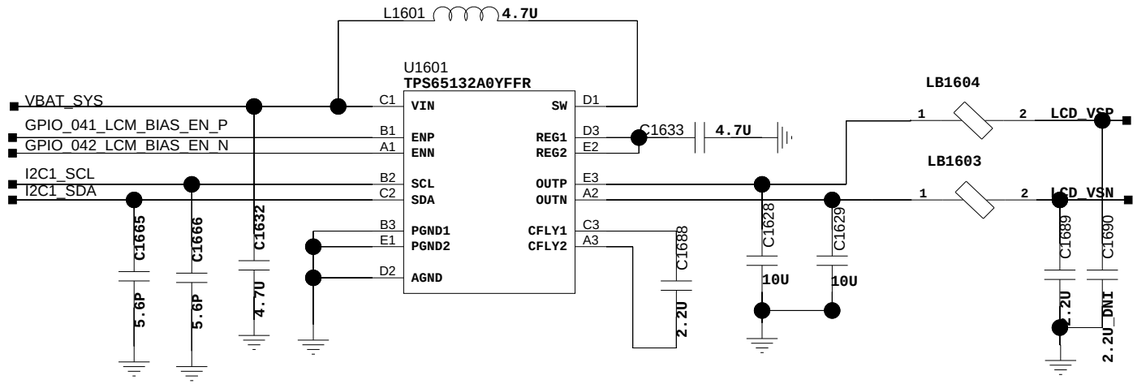

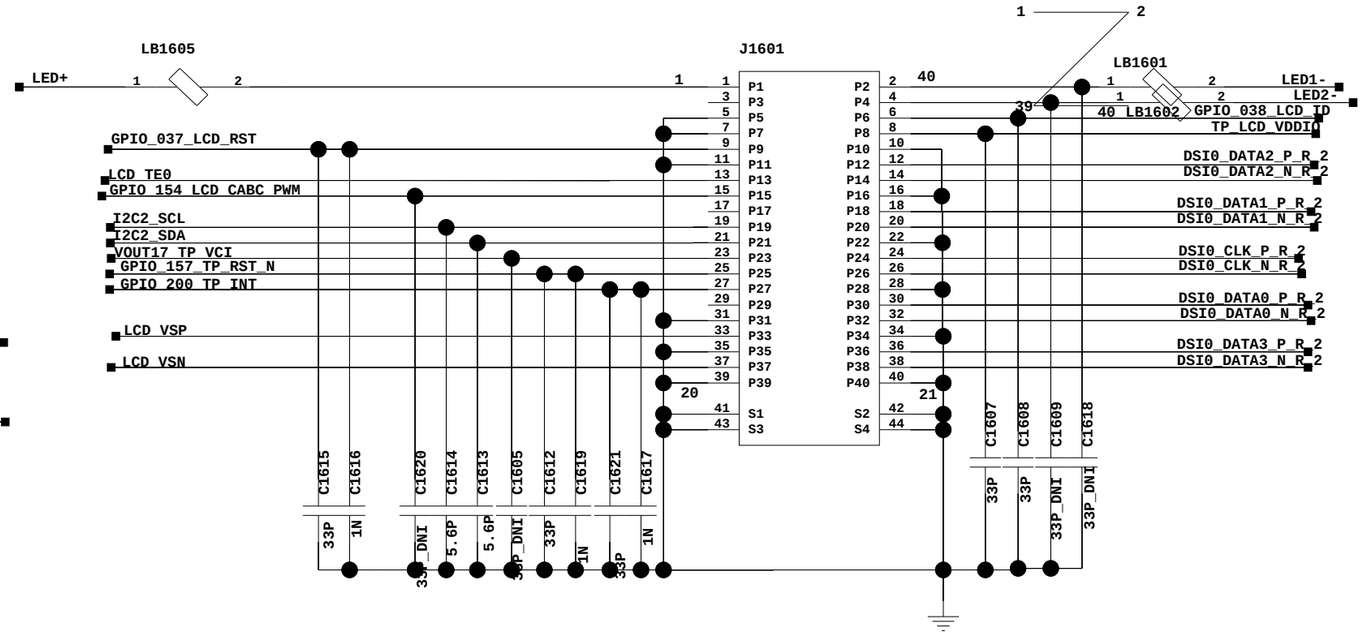

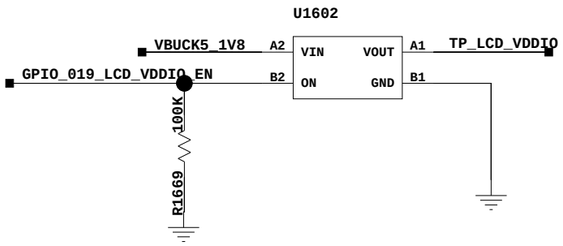

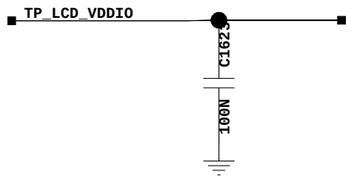

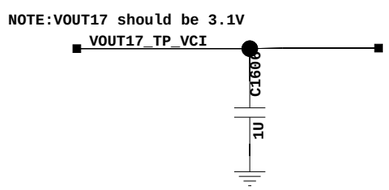

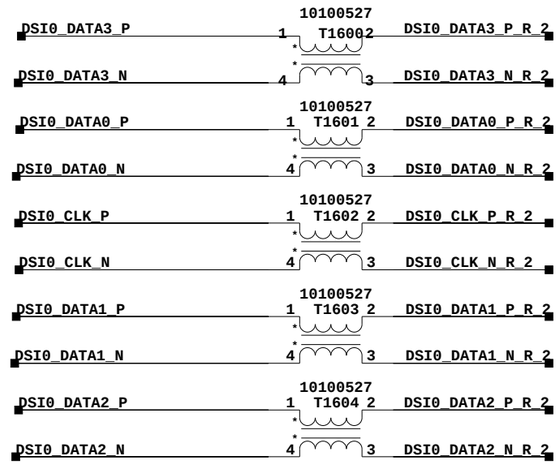

LCD BL DRIVER

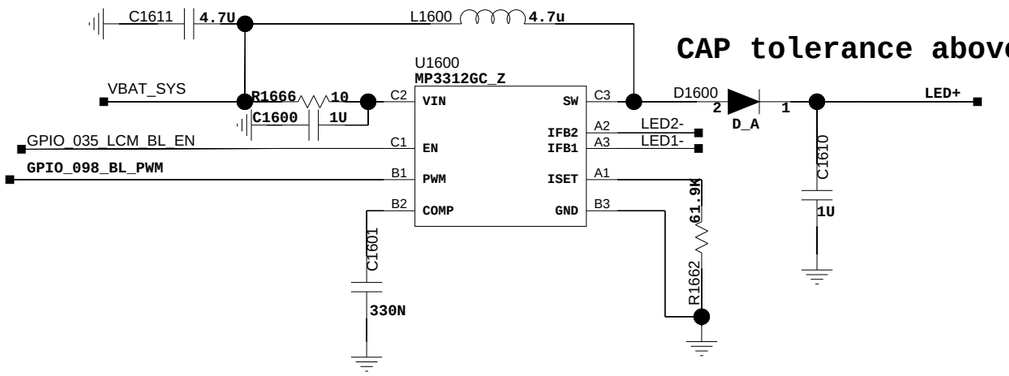

CAP tolerance above 50V!!

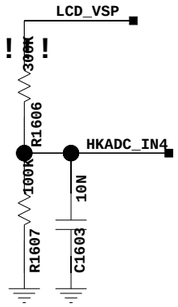

The type and specification of the components refer to the BOM

				NA	20140523
				ECA NO	DATE
DESIGNED	yuanhailin/00265042	Grace_TUL		03022AQQ_SCHZH	
REVIEWED	wangweijie/00122033				
		VER	PART_NUMBER	SHEET 16 OF 60	
		A	03022AQQ	HUAWEI TECH CO.,LTD.	

17. Flash LED

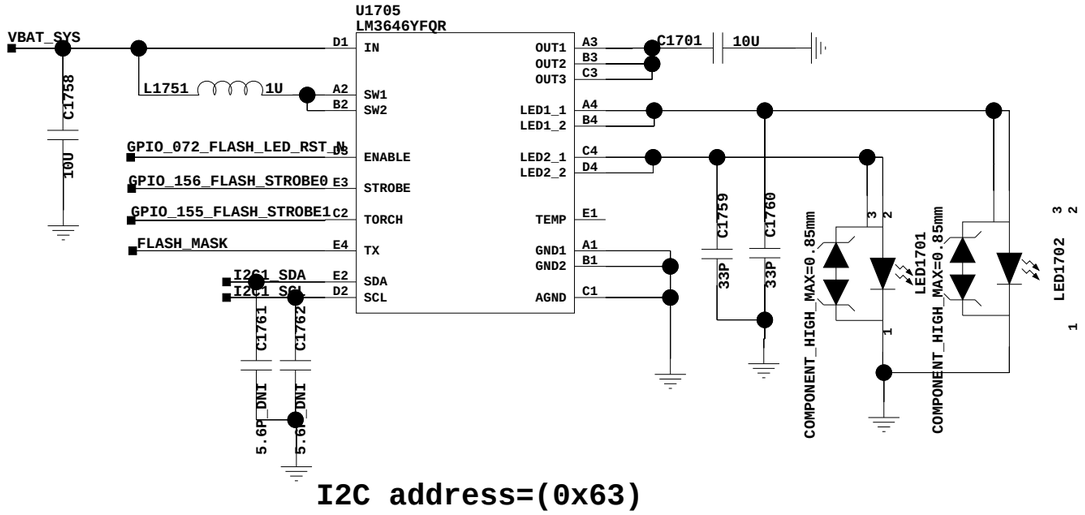

I2C address=(0x63)

کانال ما در تلگرام

@JahanIC

The type and specification of the components refer to the BOM

				NA	20140523
				ECA NO	DATE
DESIGNED	liumingwu 00241889	SeattleUL			
REVIEWED	wangweijie 00122033				
		VER	PART_NUMBER	SHEET 17 OF 60	
		A	03022AQQ	HUAWEI TECH CO.,LTD.	

18. Camera

13M MAIN CAMERA

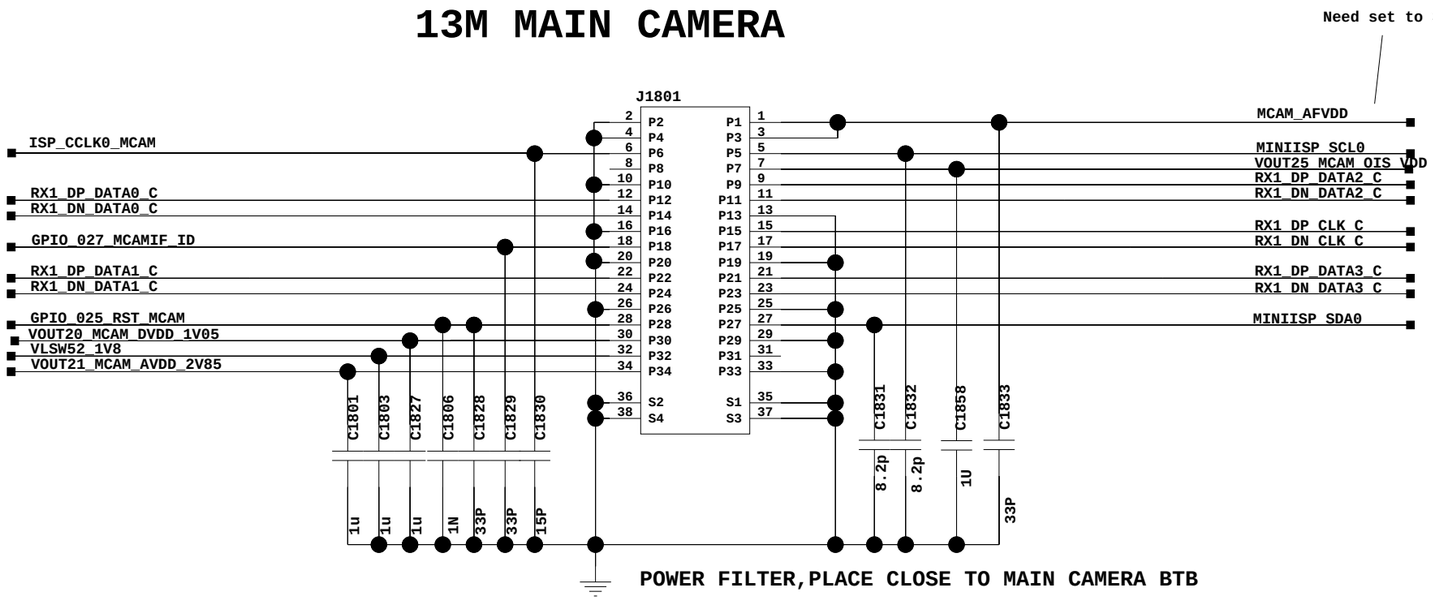

POWER FILTER,PLACE CLOSE TO MAIN CAMERA BTB

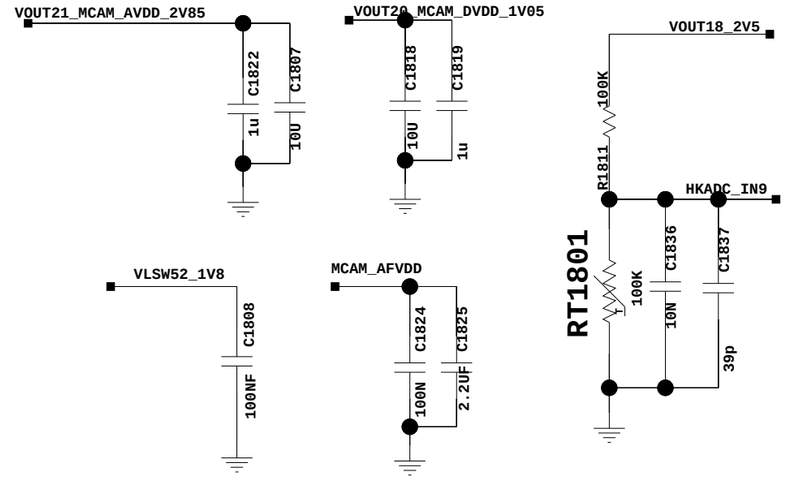

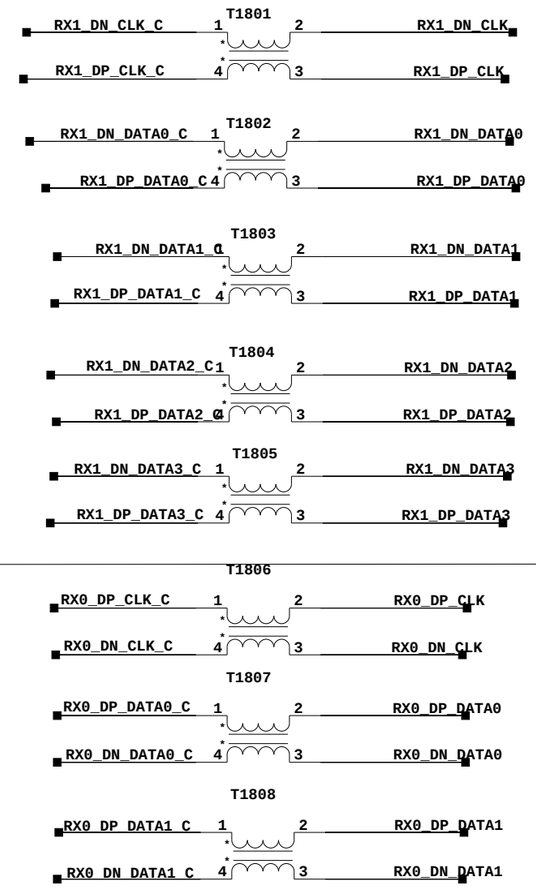

MCAM_AFVDD=0.6*(1+200/51)=2.95v

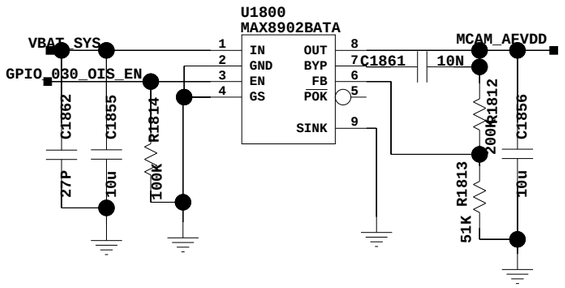

کانال ما در تلگرام

@JahanIC

8M SLAVE CAMERA

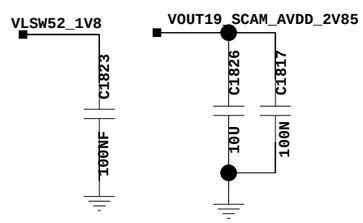

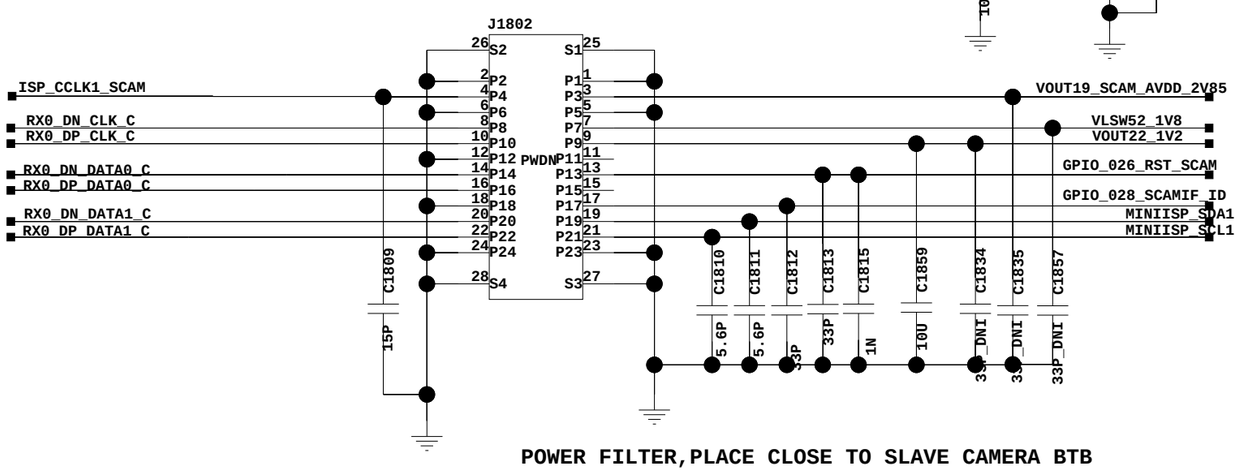

POWER FILTER,PLACE CLOSE TO SLAVE CAMERA BTB

The type and specification of the components refer to the BOM

				NA	20140523
				ECA NO	DATE
DESIGNED	yuanhailin /00265042	Grace_TUL			
REVIEWED	wangweijie /00303684				
		VER	PART_NUMBER	SHEET 18 OF 60	
		A		HUAWEI TECH CO.,LTD.	

19. Reserved for ISP

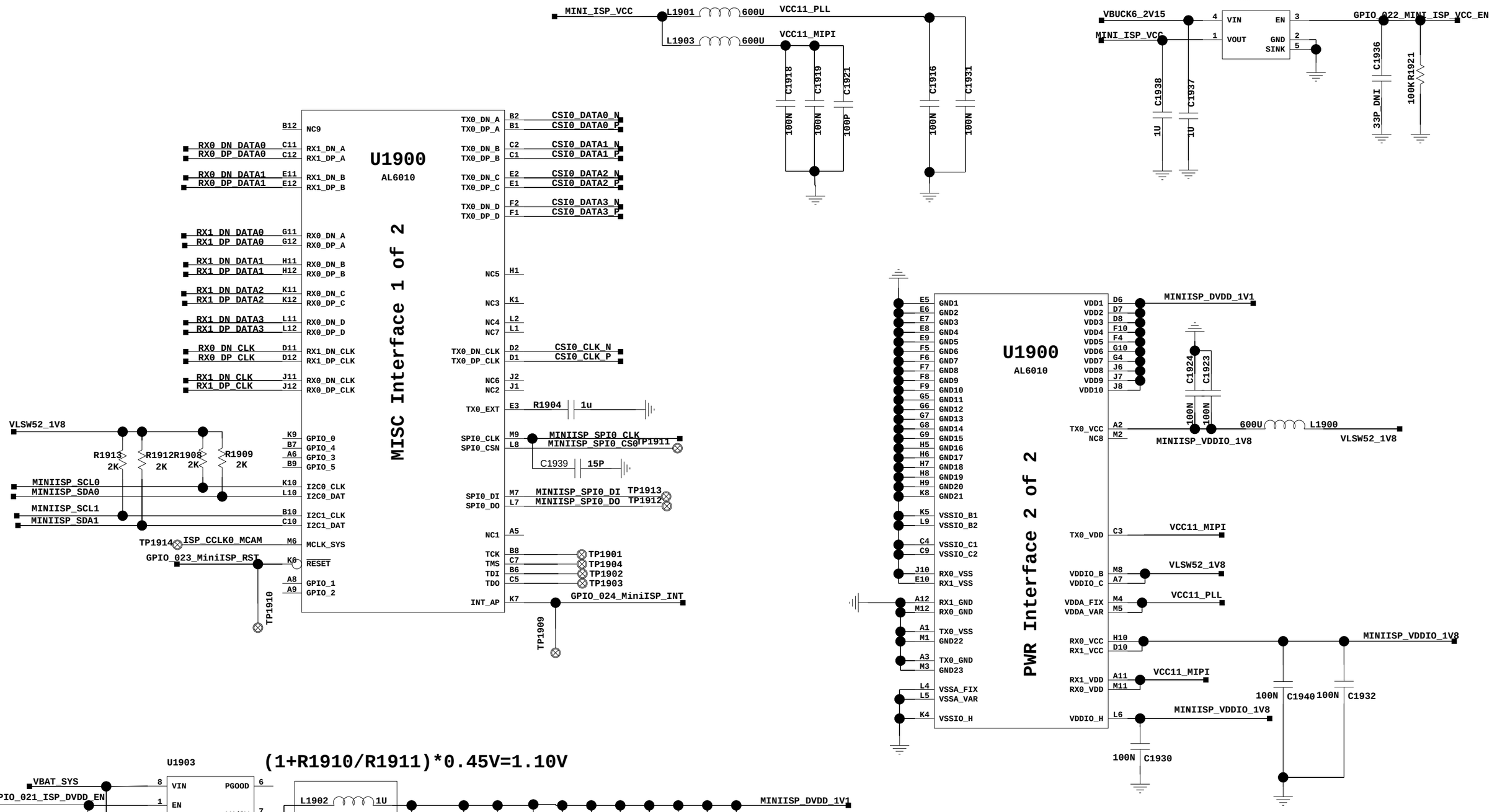

The type and specification of the components refer to the BOM

					08-01-2015_23:59
				NA	20140523
				ECA NO	DATE
DESIGNED	yuanhailin /00265042	Grace_TUL		03022MYN_SCHZH	
REVIEWED	wangweijie /00303684				
		VER	PART_NUMBER	SHEET 19 OF 60	
		A	03022MYN	HUAWEI TECH CO.,LTD.	

20. CODEC HI6402

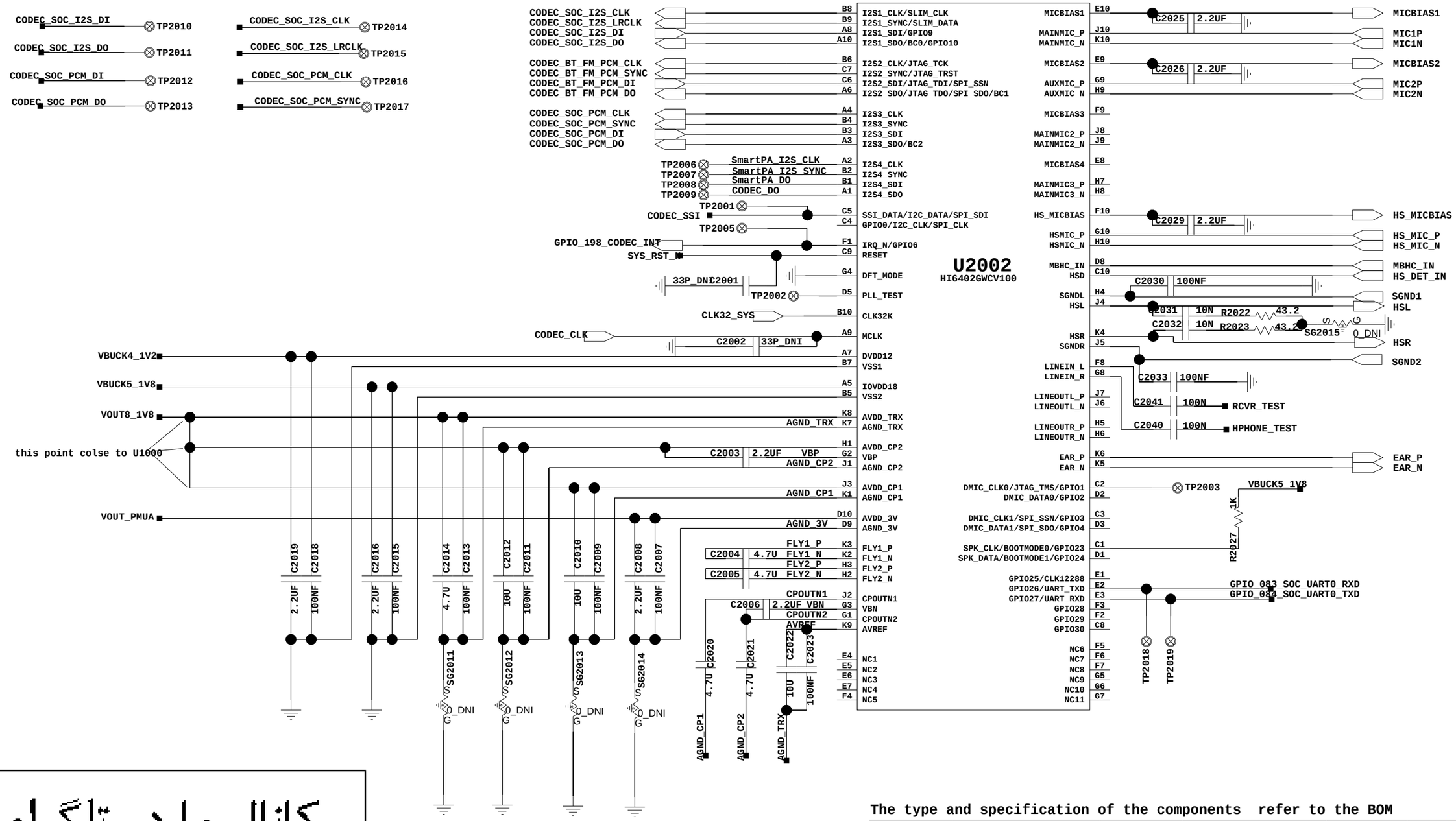

کانال ما در تلگرام

@JahanIC

The type and specification of the components refer to the BOM

				NA	
				ECA NO	DATE
DESIGNED	liumingwu 00241889	SeattleUL			
REVIEWED	wangweijie 00122033				
		VER	PART_NUMBER	SHEET 20 OF 60	
		A	03030001	HUAWEI TECH CO.,LTD.	

21. MIC/RCV/SPK/VIB

VIB

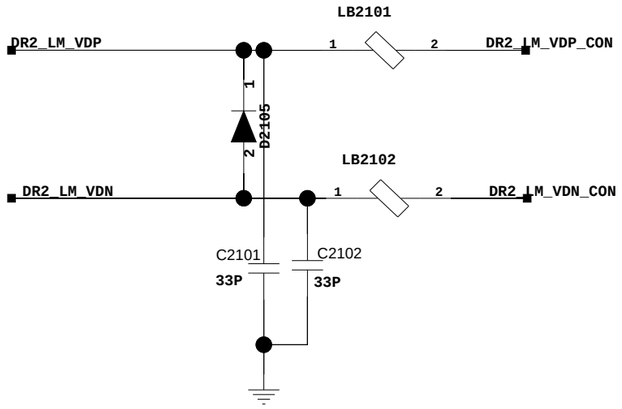

RCV

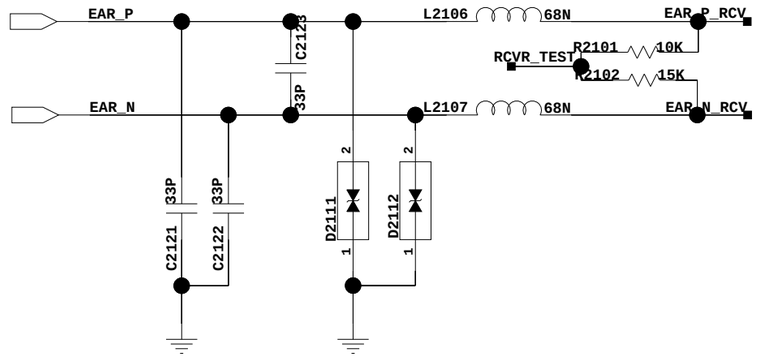

MIC/VIB CON

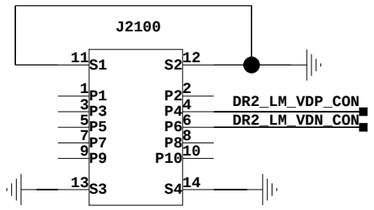

MIC

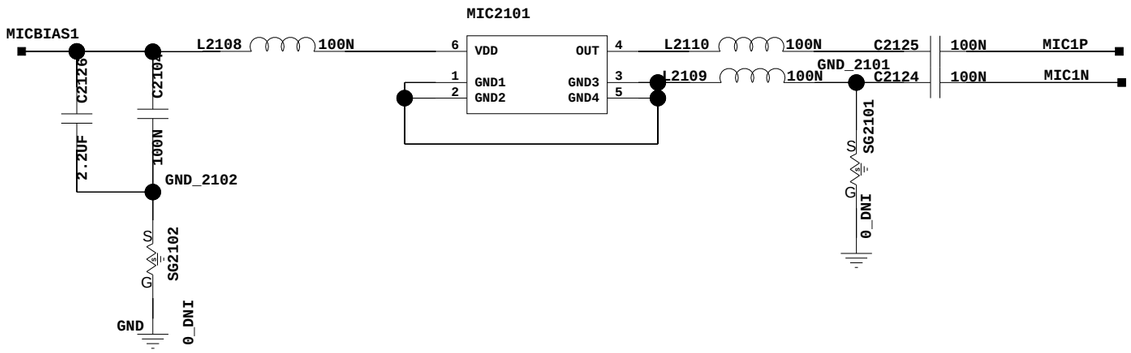

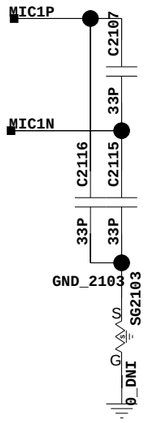

کانال ما در تلگرام

@JahanIC

The type and specification of the components refer to the BOM

				NA	20140523
				ECA NO	DATE
DESIGNED	liumingwu 00241889	SeattleUL			
REVIEWED	wangweijie 00122033				
		VER	PART_NUMBER	SHEET 21 OF 60	
		A	03022AQQ	HUAWEI TECH CO.,LTD.	

22. Headphone

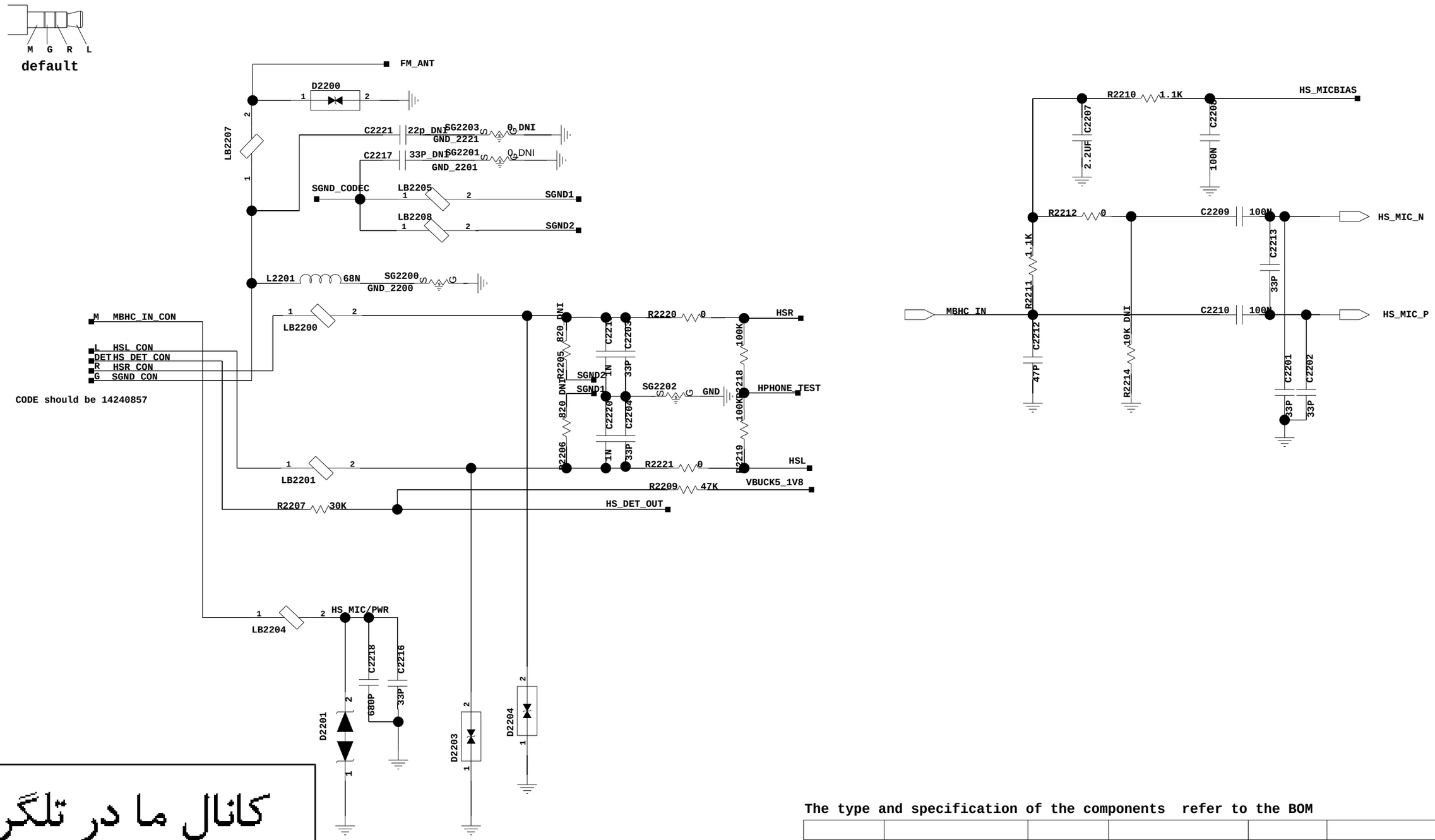

کانال ما در تلگرام

@JahanIC

The type and specification of the components refer to the BOM

				NA	20140523
				ECA NO	DATE
DESIGNED	liumingwu 00241889	SeattleUL			
REVIEWED	wangweijie 00122033				
		VER	PART_NUMBER	SHEET 22 OF 60	
		A	03022AQQ	HUAWEI TECH CO.,LTD.	

23. Audio

IN1/2	NO1/2	NC1/2
L	OFF	ON
H	ON	OFF

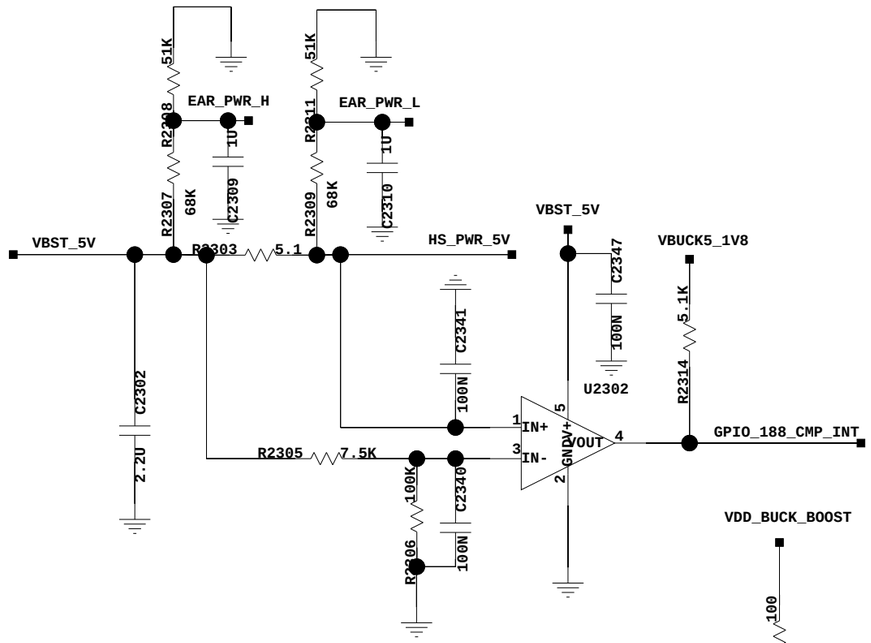

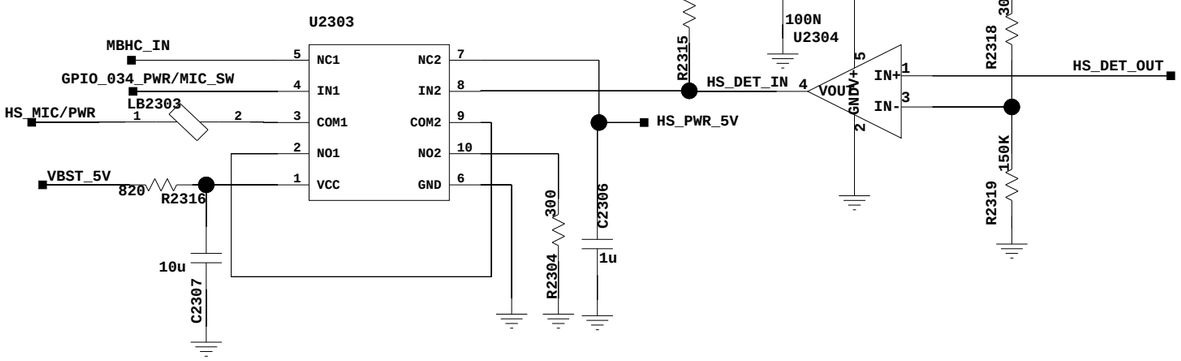

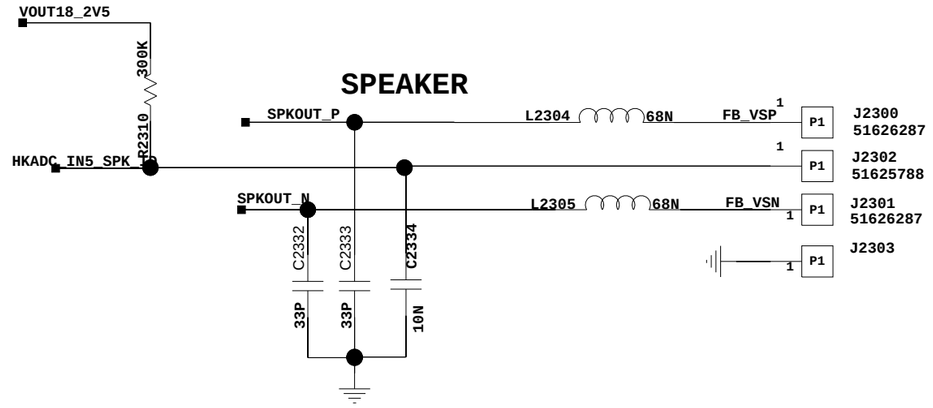

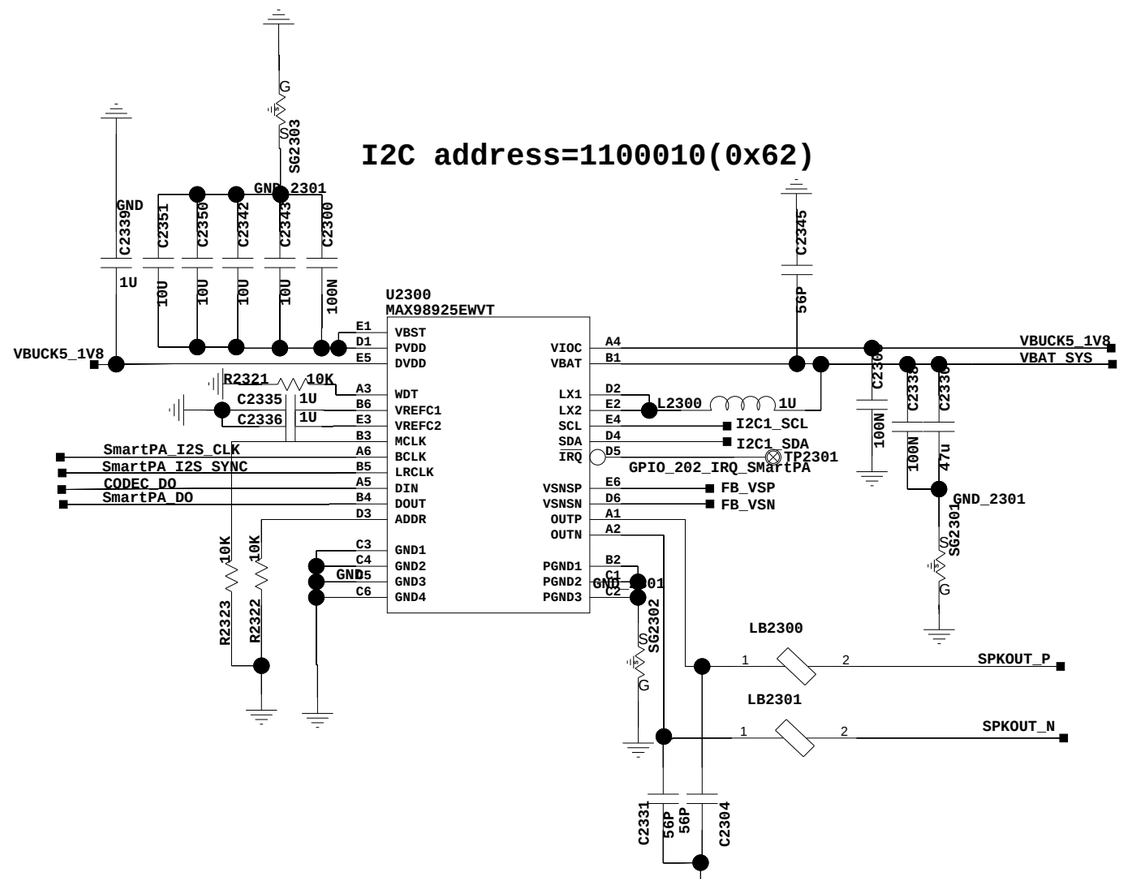

The type and specification of the components refer to the BOM

					16-01-2015_09:07
					20140523
				ECA NO	DATE
DESIGNED	liumingwu 00241889	SeattleUL			
REVIEWED	wangweijie 00122033				
		VER	PART_NUMBER	SHEET 23 OF 60	
				HUAWEI TECH CO.,LTD.	

کانال ما در تلگرام

@JahanIC

24. Healthy Headphone

کانال ما در تلگرام

@JahanIC

The type and specification of the components refer to the BOM

					19-09-2014_10:00
					20140523
				ECA NO	DATE
DESIGNED	liumingwu 00241889	SeattleUL			
REVIEWED	wangweijie 00122033				
		VER	PART_NUMBER	SHEET 24 OF 60	
				HUAWEI TECH CO.,LTD.	

25. X-Sensor

کانال ما در تلگرام

@JahanIC

Accelerometer and Gyroscope 6-AXIS SENSOR

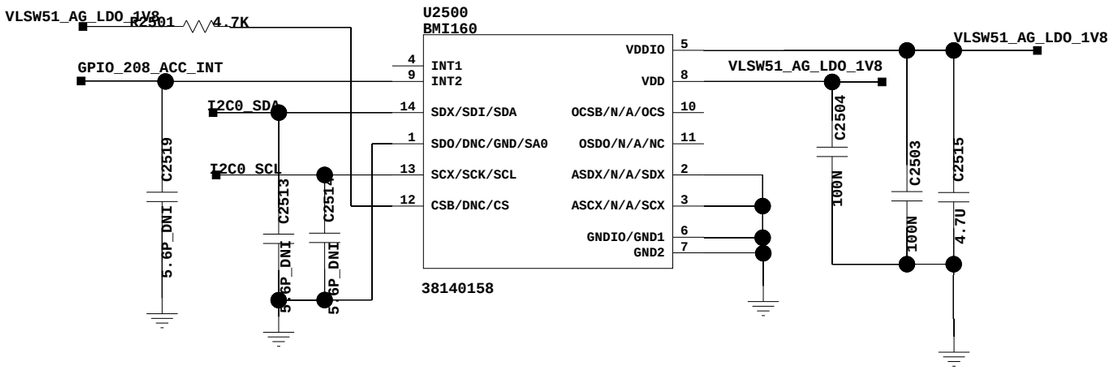

SDO=1 ADDRESS=0X6B(ST)/0X69(BOSCH)
SDO=0 ADDRESS=0X6A(ST)/0X68(BOSCH)

Hall

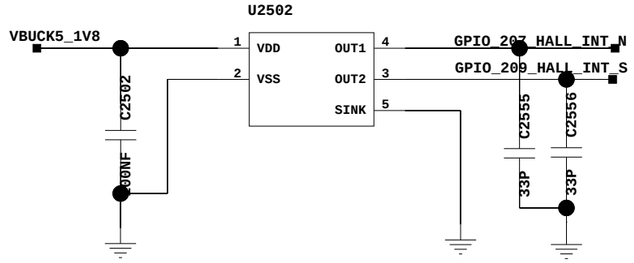

Compass

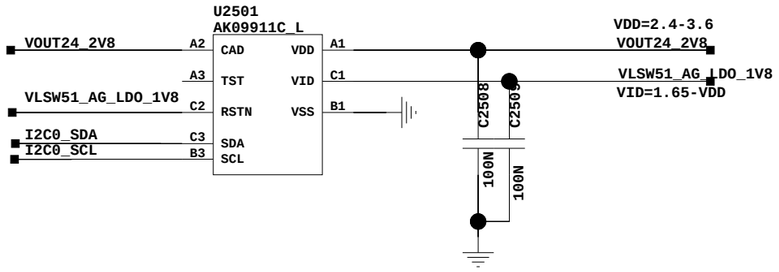

The type and specification of the components refer to the BOM

					2012-09-20
				NA	20140523
				ECA NO	DATE
DESIGNED	yuanhailin/00265042	Grace_TUL		00001234	
REVIEWED	wangweijie/00122033				
		VER	PART_NUMBER	SHEET 25 OF 60	
		A	03022AQQ	HUAWEI TECH CO.,LTD.	

26. X-Sensor+IrDA

Hot Area TMP sensor

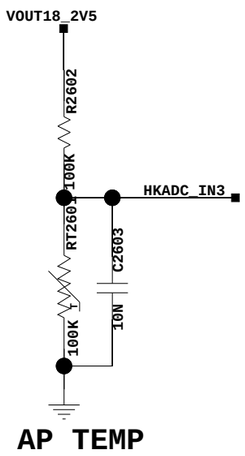

کانال ما در تلگرام

@JahanIC

The type and specification of the components refer to the BOM

				NA	20140523
				ECA NO	DATE
DESIGNED	liumingwu 00241889	SeattleUL			
REVIEWED	wangweijie 00122033				
		VER	PART_NUMBER	SHEET 26 OF 60	
		A	03022AQQ	HUAWEI TECH CO.,LTD.	

27. External DC/DC

The type and specification of the components refer to the BOM

				NA	20140523
				ECA NO	DATE
DESIGNED	liumingwu 00241889	SeattleUL			
REVIEWED	wangweijie 00122033				
		VER	PART_NUMBER	SHEET 27 OF 60	
		A	03022AQQ	HUAWEI TECH CO.,LTD.	

28. SIM/uSD Card

SIM Card 1

DNI FOR V2

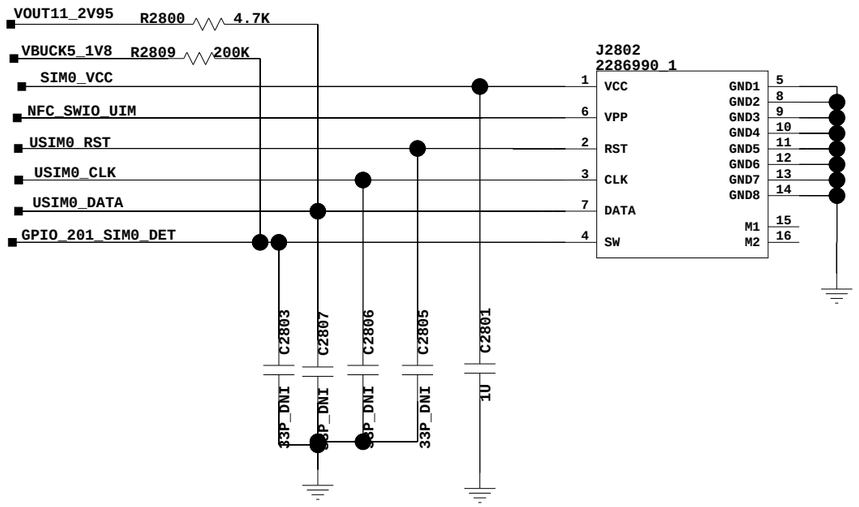

Micro SD CARD

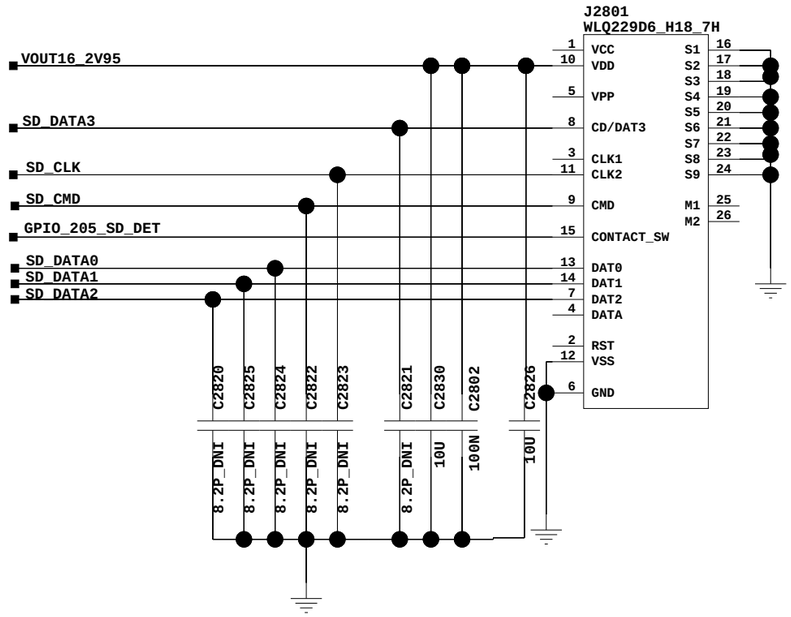

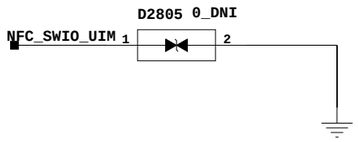

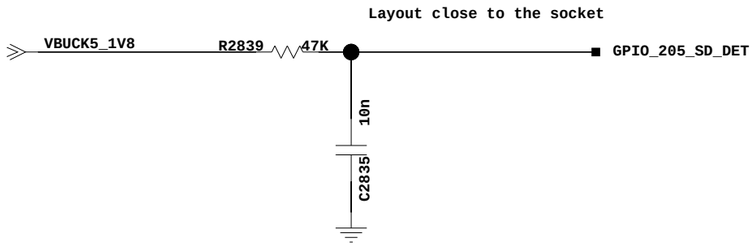

GPIO_202 \ SIM1_VCC	SE_VCC	VOUT12_2V95
H		○
L	○	

The type and specification of the components refer to the BOM

				NA	20140523
				ECA NO	DATE
DESIGNED	liumingwu 00241889	SeattleUL			
REVIEWED	wangweijie 00122033				
		VER	PART_NUMBER	SHEET 28 OF 60	
		A	03022AQQ	HUAWEI TECH CO.,LTD.	

کانال ما در تلگرام

@JahanIC

29. FPC Interface

PROXIMITY&AMBIENT LIGHT

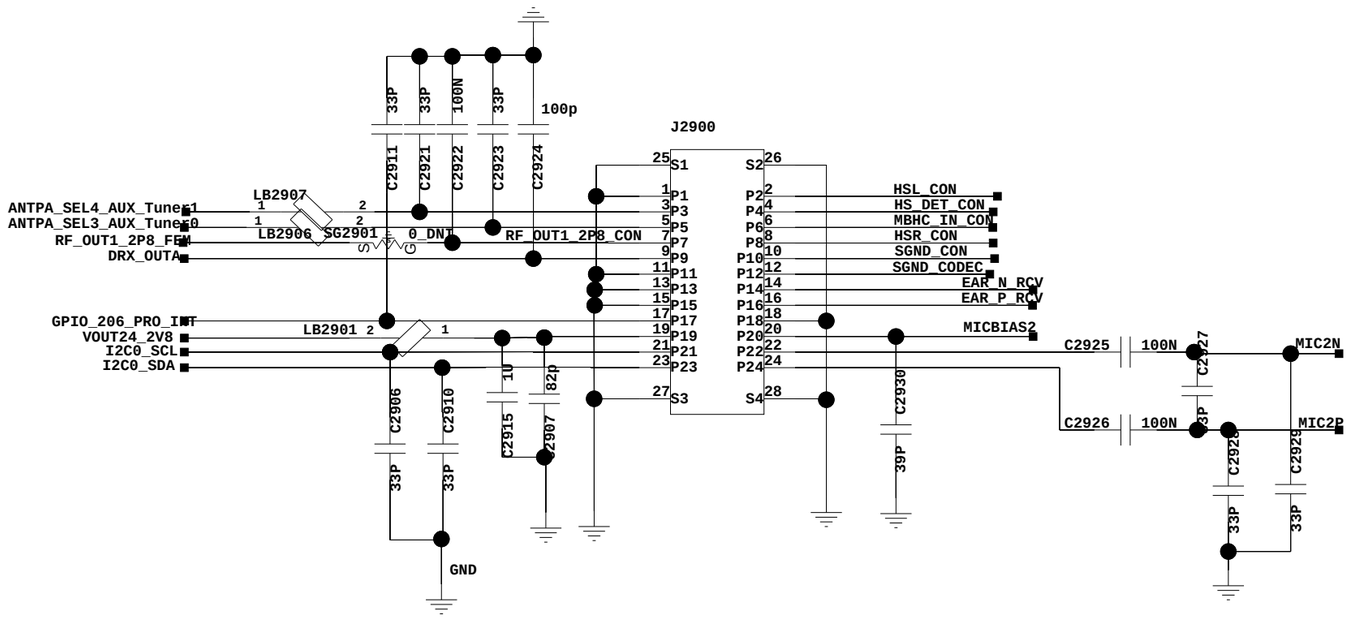

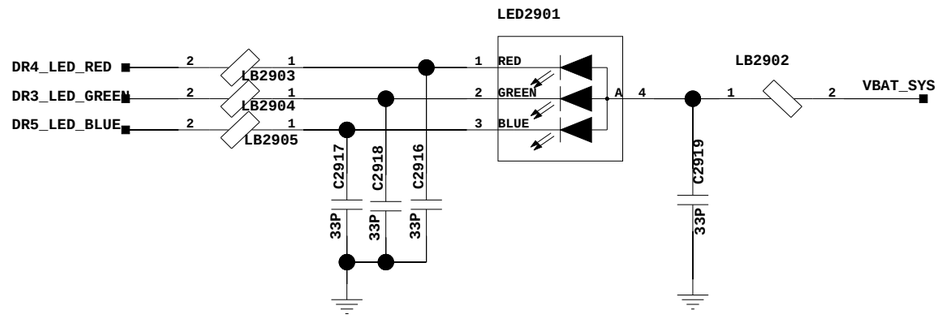

PWRON KEY&KEY UP/DOWN BTB

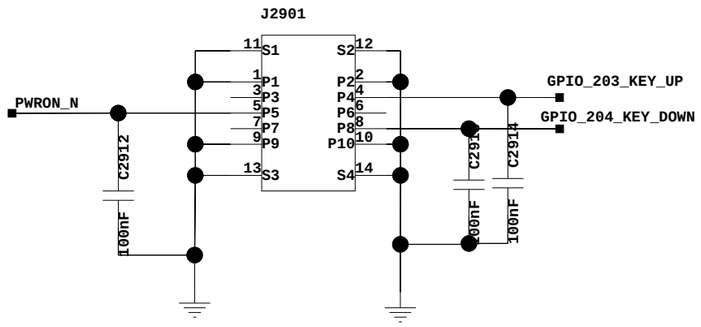

کانال ما در تلگرام

@JahanIC

The type and specification of the components refer to the BOM

				NA	20140523
				ECA NO	DATE
DESIGNED	liumingwu 00241889	Seattle+UL			
REVIEWED	wangweijie 00122033				
		VER	PART_NUMBER	SHEET 29 OF 60	
		A	03022AQQ	HUAWEI TECH CO.,LTD.	

30. Test Point/Shielding

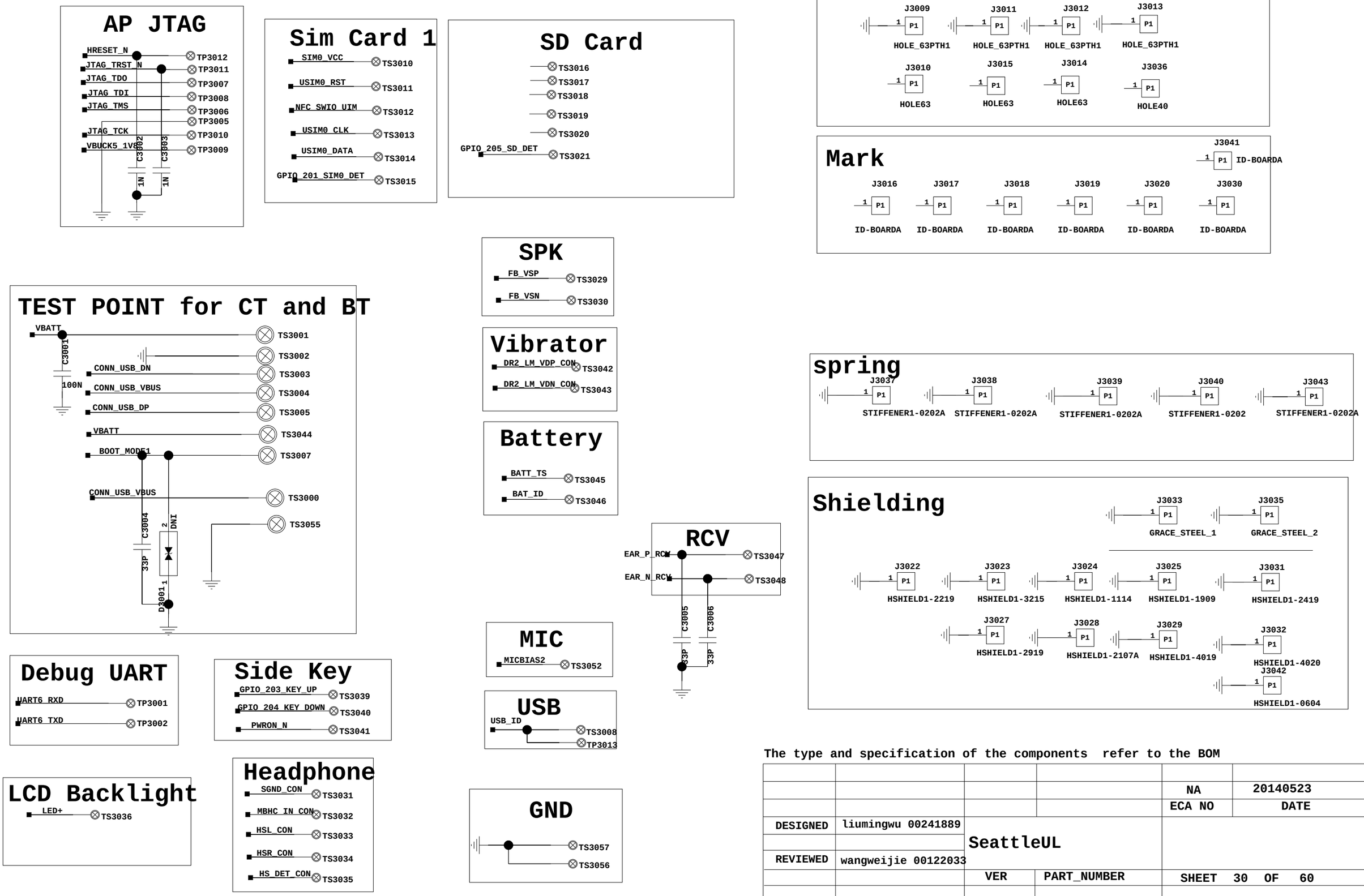

The type and specification of the components refer to the BOM

				NA	20140523
				ECA NO	DATE
DESIGNED	liumingwu 00241889	SeattleUL			
REVIEWED	wangweijie 00122033				
		VER	PART_NUMBER	SHEET 30 OF 60	
		A	03022AQQ	HUAWEI TECH CO.,LTD.	

31.Tunner IC and FPGA

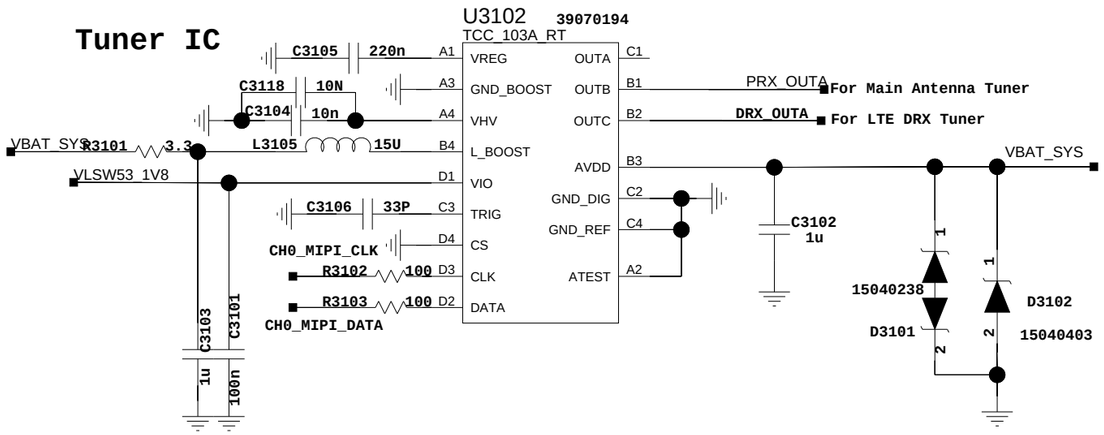

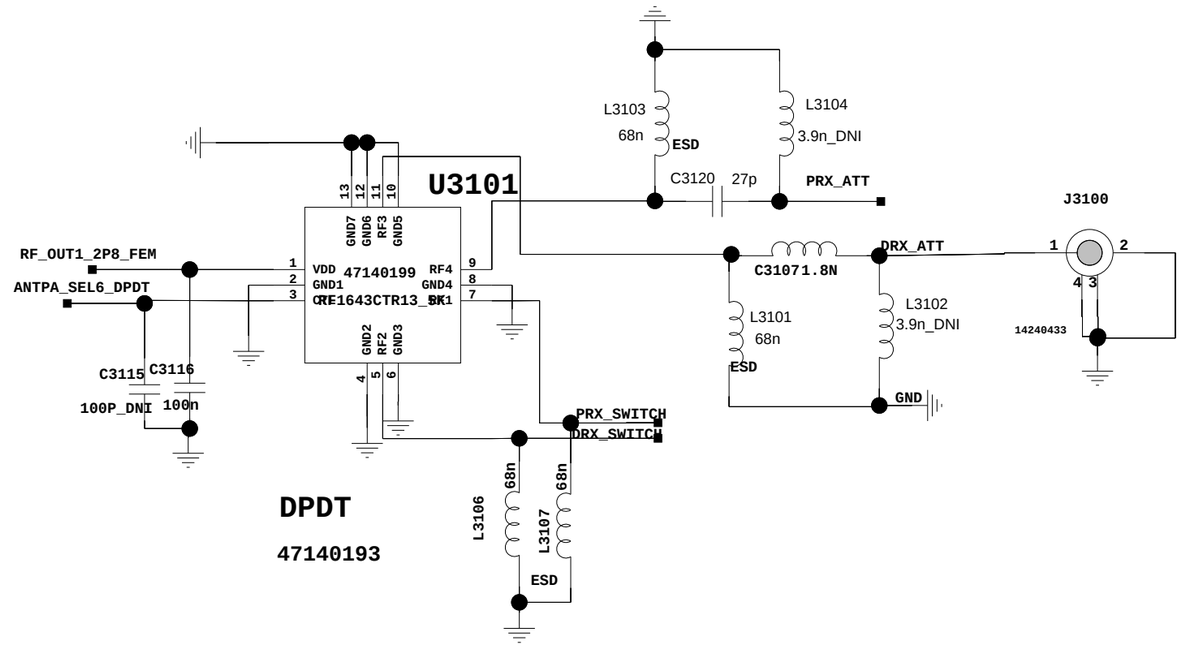

کانال ما در تلگرام

@JahanIC

The type and specification of the components refer to the BOM

					10-01-2015_12:06
				ECA NO	DATE
DESIGNED	Yuan Hailin 00265042	SeattleUL			
REVIEWED	Wang Weijie 00122033				
		VER	PART_NUMBER	SHEET 31 OF 60	
				HUAWEI TECH CO.,LTD.	

32.RF PMU(CH0)/External Regulator£¨CH1£©

CH0

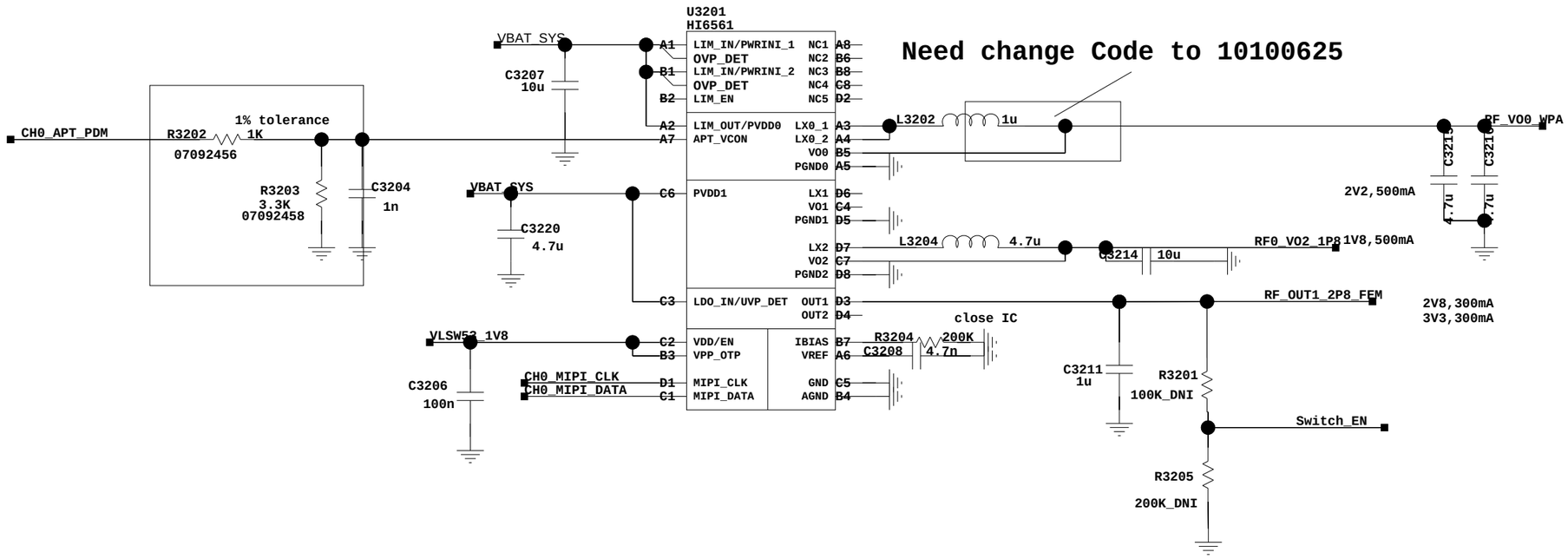

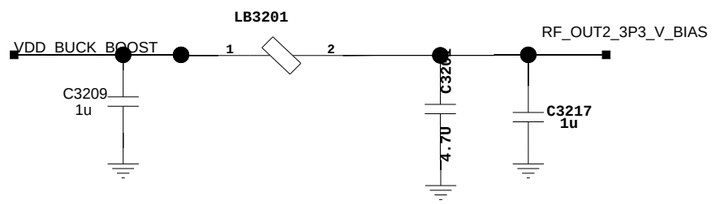

کانال ما در تلگرام

@JahanIC

The type and specification of the components refer to the BOM

					10-01-2015_12:04
				NA	
				ECA NO	DATE
DESIGNED	ZHANGSAN XXXXX	A3TITLEBLOCK		00001234	
REVIEWED	renyiwei/00238345				
		VER	PART_NUMBER	SHEET 32 OF 61	
				HUAWEI TECH CO.,LTD.	

33.RF Transceiver0(CH0)/TCXO0

2G: G2/3/5/8 TDL:B40
W: B1/2/5/8 FDL:B1/3/7/8/20

	LB1	LB2	LB3	HB1	HB2	HB3	UHB1	UHB2
TX	B5/B8	GSM_LB	B20(B12)/B28	GSM_HB	B3(4)	B1/B2	B40	B7
RX_A	B5/B8	B28	B20(B12)	B1	B2/B3(4)		B40	B7
RX_B	B20(B12)	B8(B28)		B1(4)	B3(2)/GB3		B40	B7

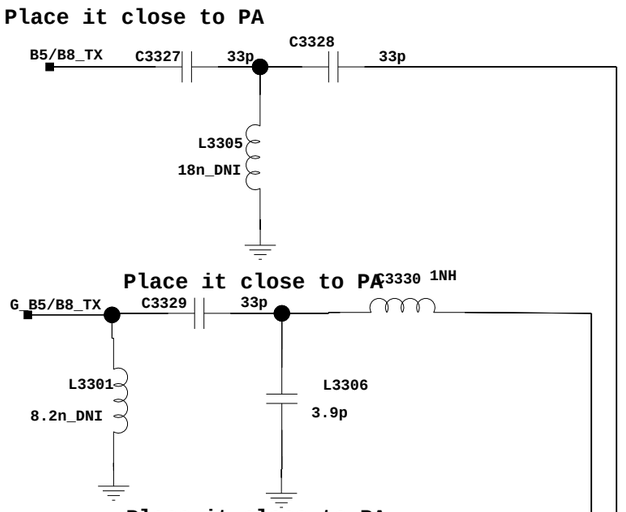

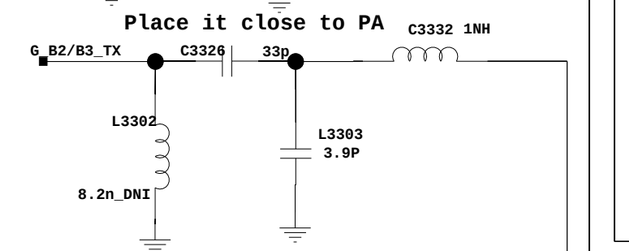

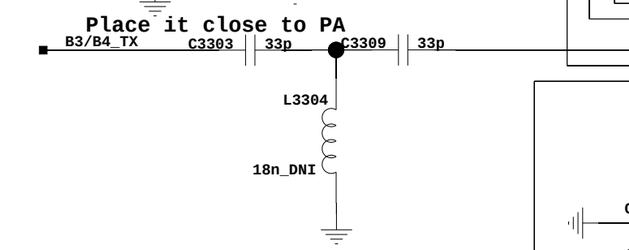

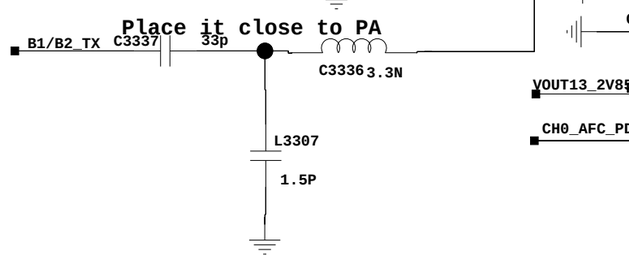

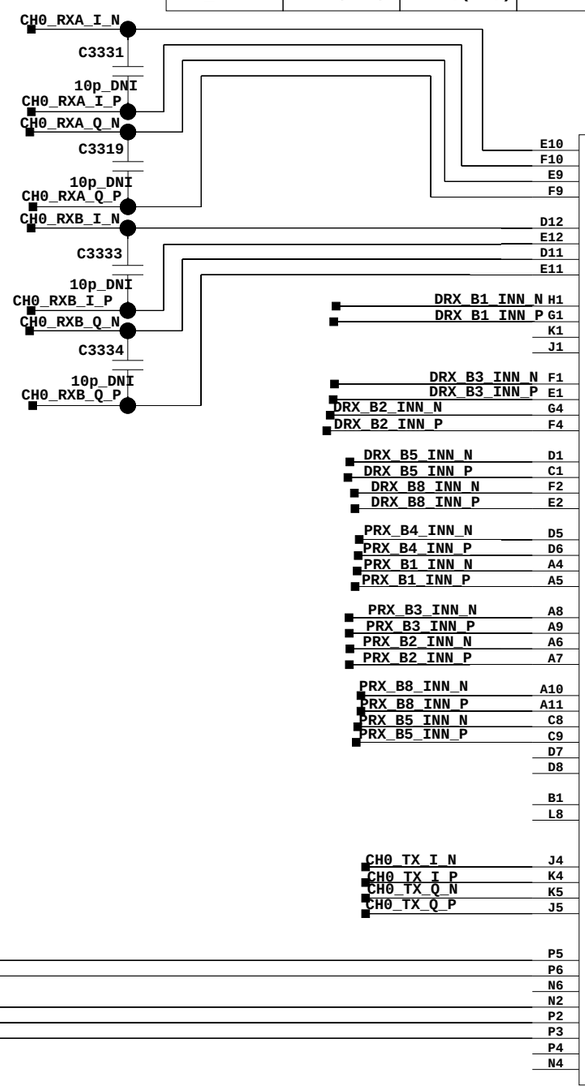

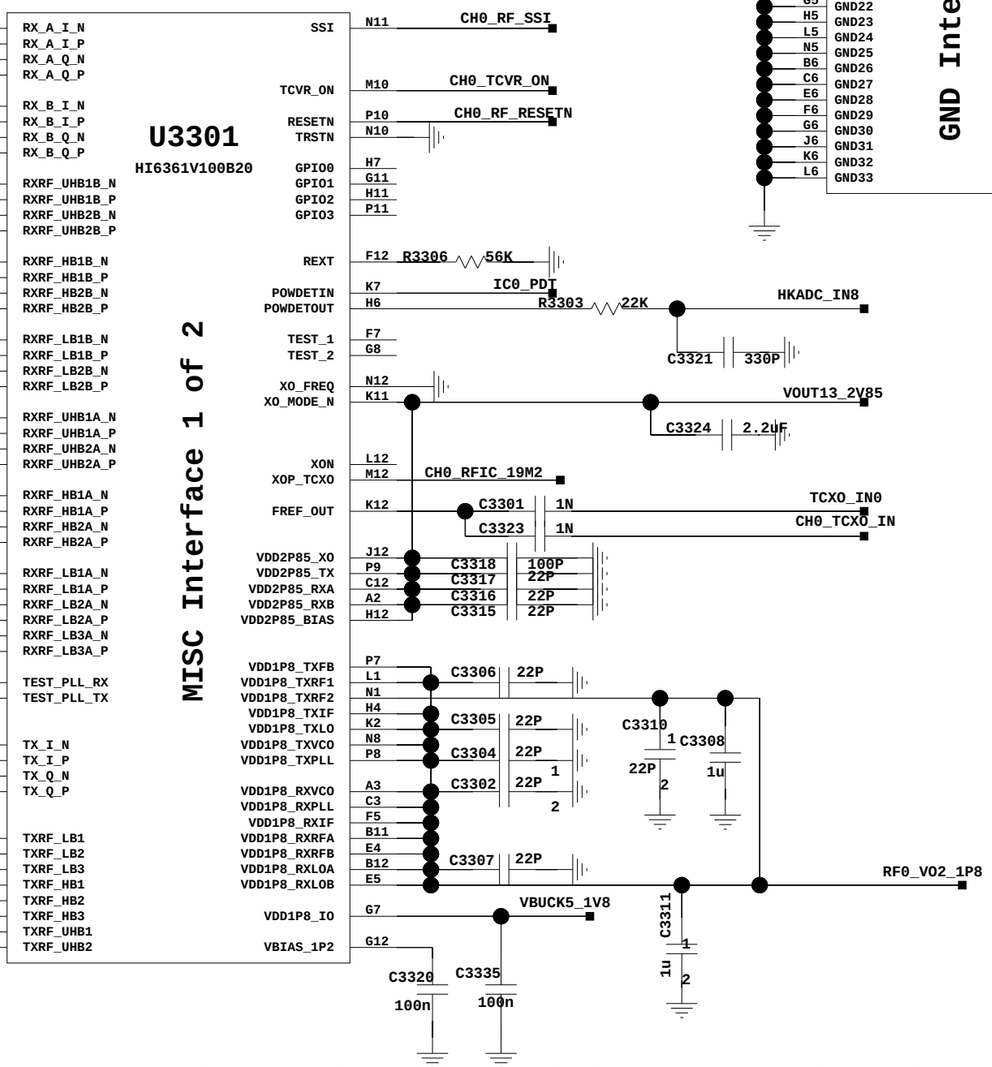

C3324	K11
R3306	F12
C3318	J12
C3317	P9
C3316	C12
C3315	A2
C3308	P7
C3306	L1
C3310	H4
C3305	K2
C3312	N8
C3302	A3
C3307	B12
C3320	G12

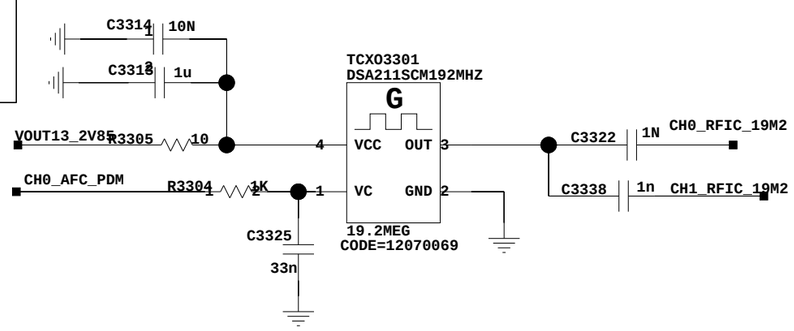

The type and specification of the components refer to the BOM

				TBD For	2014-02-27
				ECA NO	DATE
DESIGNED	wangxiaoju 00270032	HL1PINEM		03022QWC_SCHZH	
REVIEWED	xieliang 00239919				
		VER	PART_NUMBER	SHEET 33 OF 60	
		B	0302XXXX	HUAWEI TECH CO.,LTD.	

34. LTE TX(B7/40)/ B40 PRX

LTE B40 PA

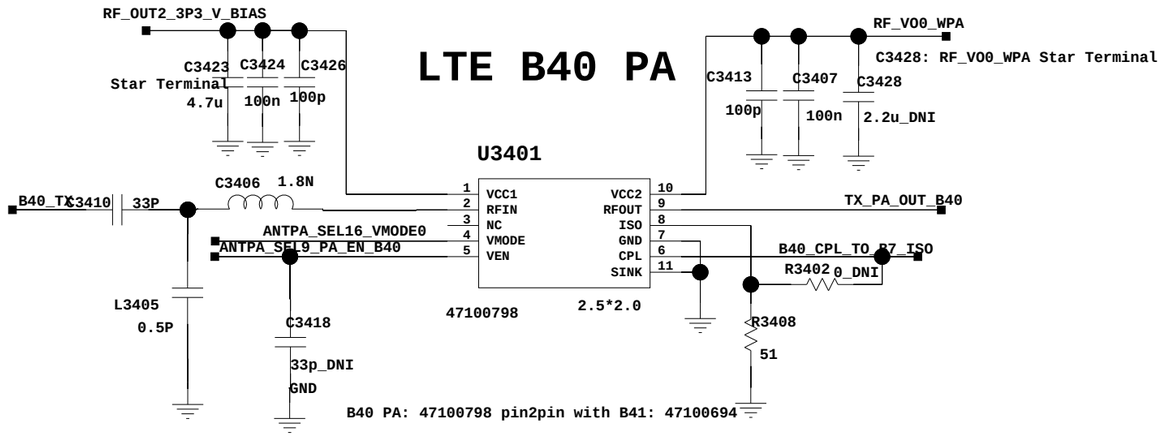

LTE B7 PA

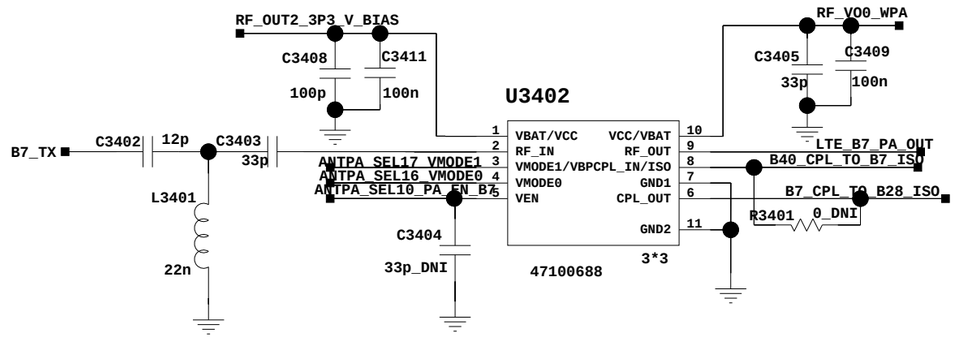

TDD B40_Tx SAW

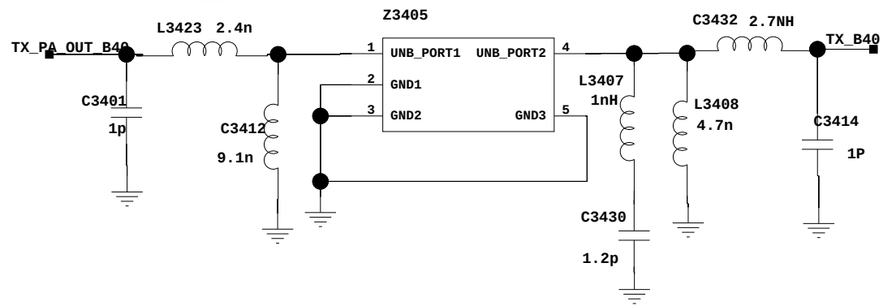

PRX B40

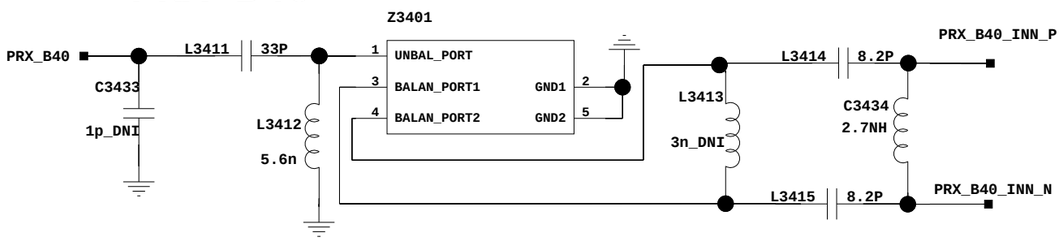

کانال ما در تلگرام

@JahanIC

The type and specification of the components refer to the BOM

				NA	
				ECA NO	DATE
DESIGNED	ZHANGSAN XXXXX	A3TITLEBLOCK		00001234	
REVIEWED	LISI XXXXX				
		VER	PART_NUMBER	SHEET 1 OF 1	
		A	03030001	HUAWEI TECH CO.,LTD.	

35. FDD LTE B28

LTE B28 PA

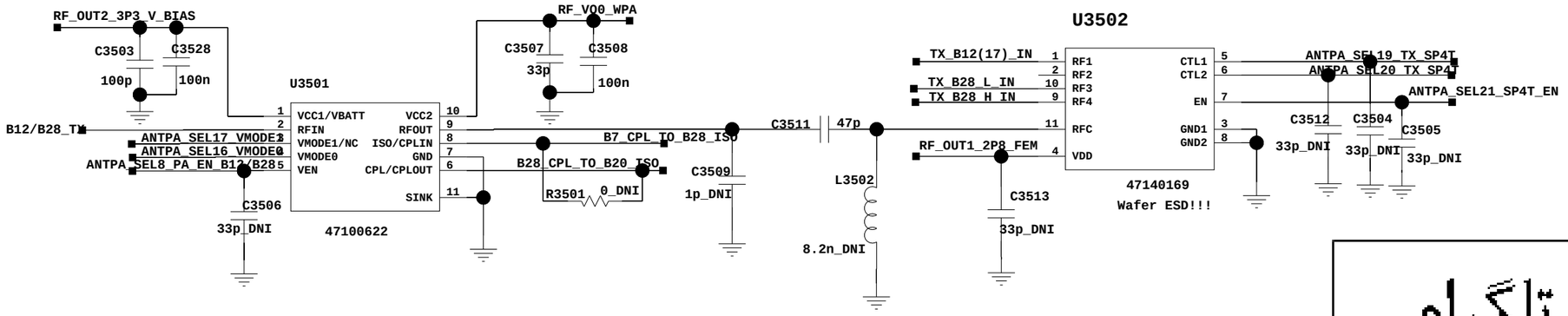

کانال ما در تلگرام

@JahanIC

LTE B28 TRX L

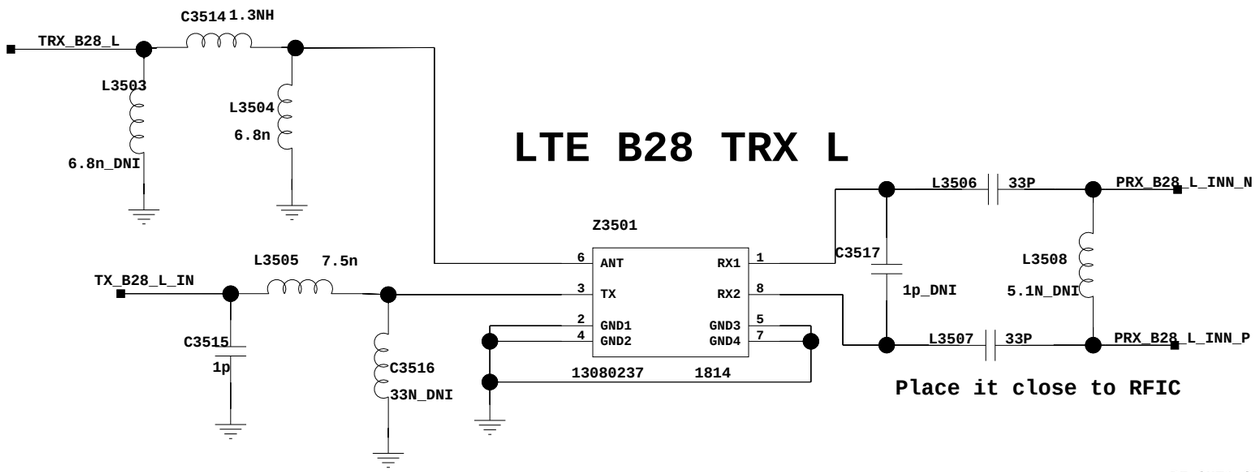

LTE B28 TRX H

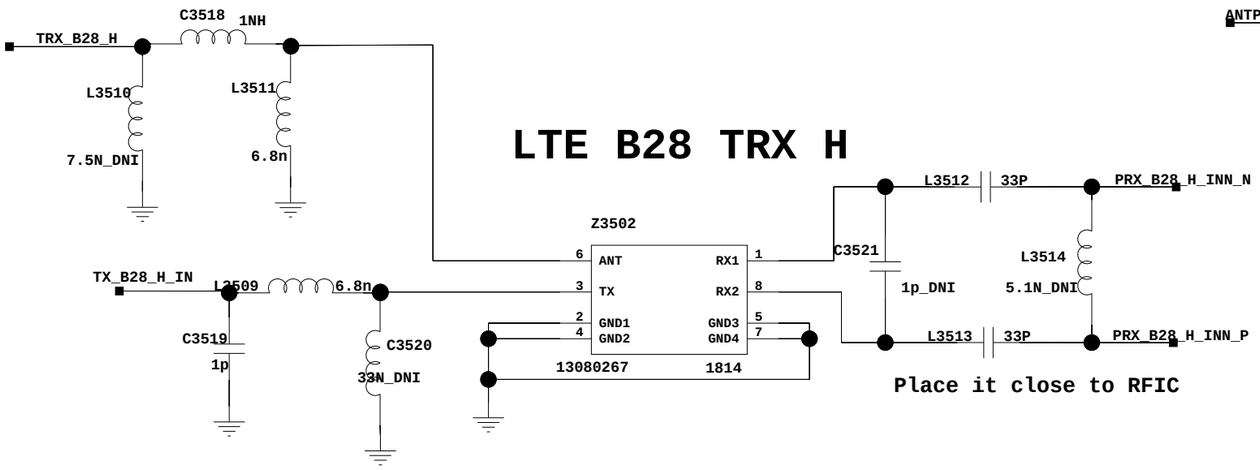

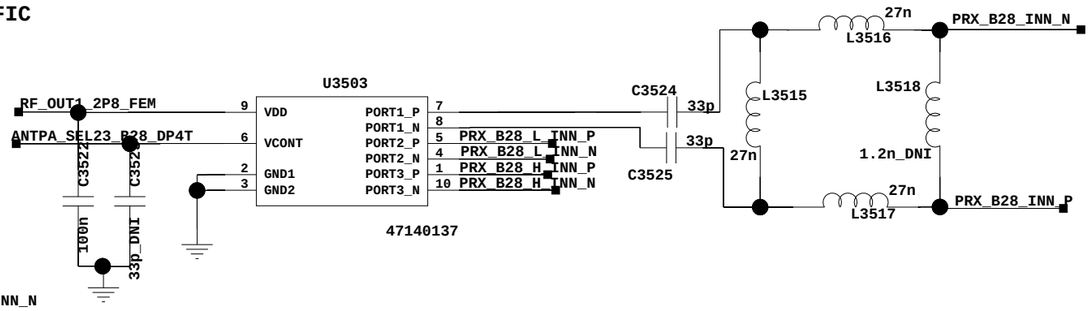

The type and specification of the components refer to the BOM

				TBD For	2014-02-27
				ECA NO	DATE
DESIGNED	wangxiaoju 00270032	HL1PINEM		03022QWC_SCHZH	
REVIEWED	xieliang 00239919				
		VER	PART_NUMBER	SHEET 35 OF 60	
		B	0301XXXX	HUAWEI TECH CO.,LTD.	

36. FDD LTE: B7/B20/B12(17)

LTE B20 PA

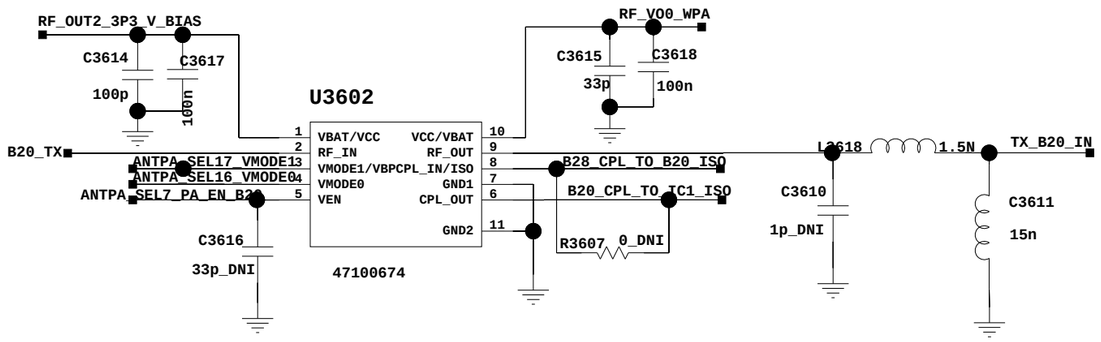

B20 PA for EU: 47100691

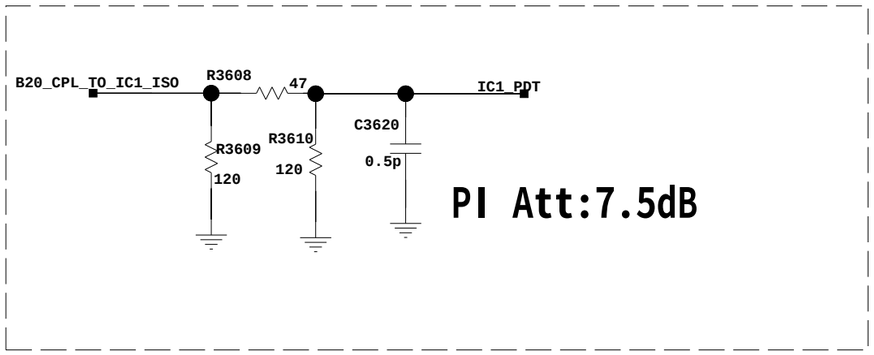

LTE B20 TRX

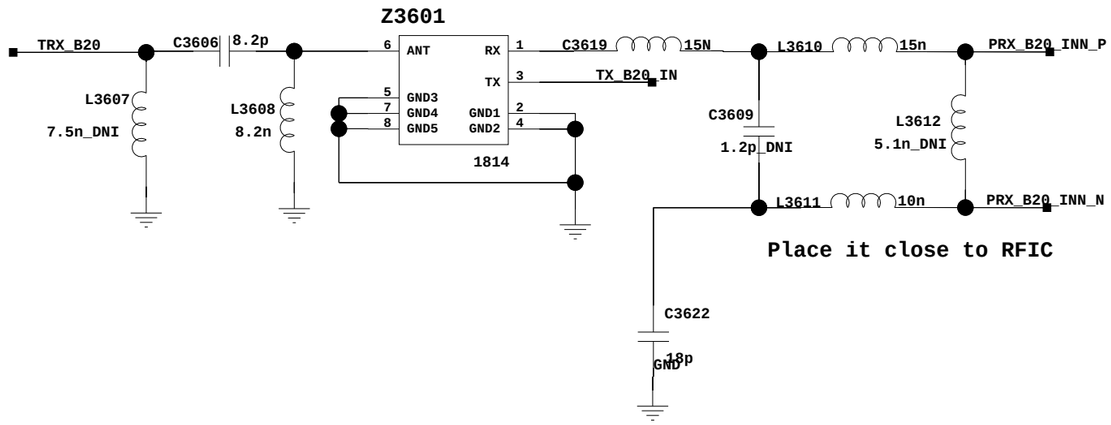

Place it close to RFIC

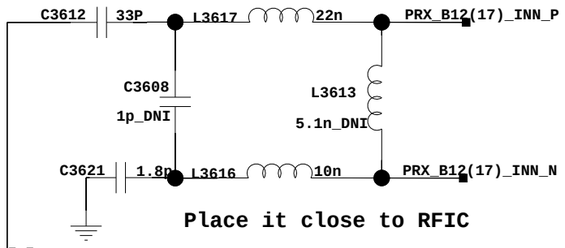

Place it close to RFIC

LTE B7 TRX

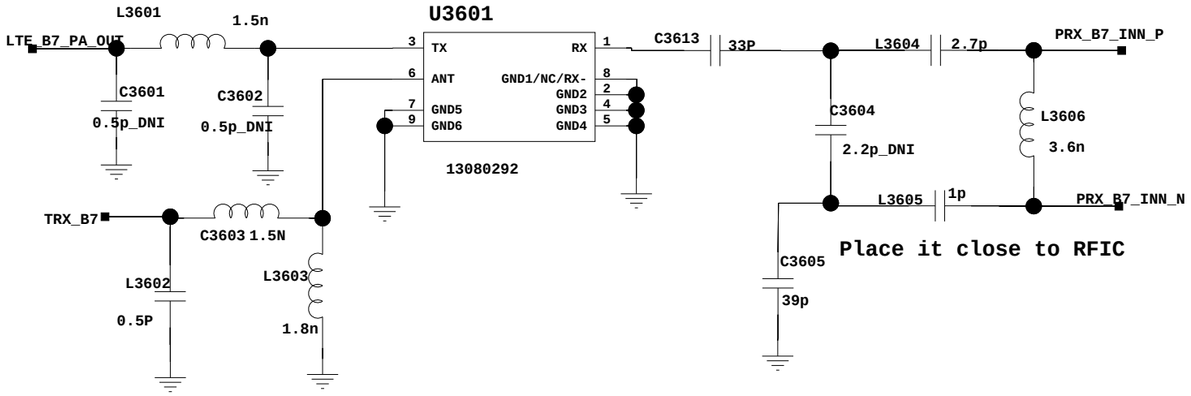

Place it close to RFIC

LTE B12/B17 TRX

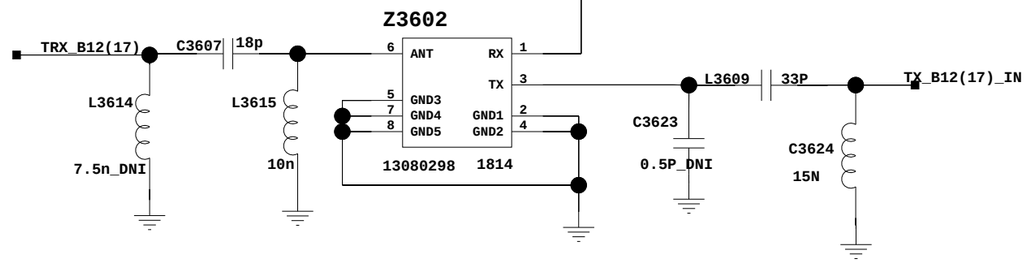

B12 Dup for Latin: 13080298 Sourcing

The type and specification of the components refer to the BOM

				TBD For	2014-02-27
				ECA NO	DATE
DESIGNED	wangxiaoju 00270032	A3TITLEBLOCK		03022QWC_SCHZH	
REVIEWED	xieliang 00239919				
		VER	PART_NUMBER	SHEET 36 OF 60	
		B	0302XXXX	HUAWEI TECH CO.,LTD.	

37. UMTS/LTE B1/B2/B3/B4/B5/B8 TRX

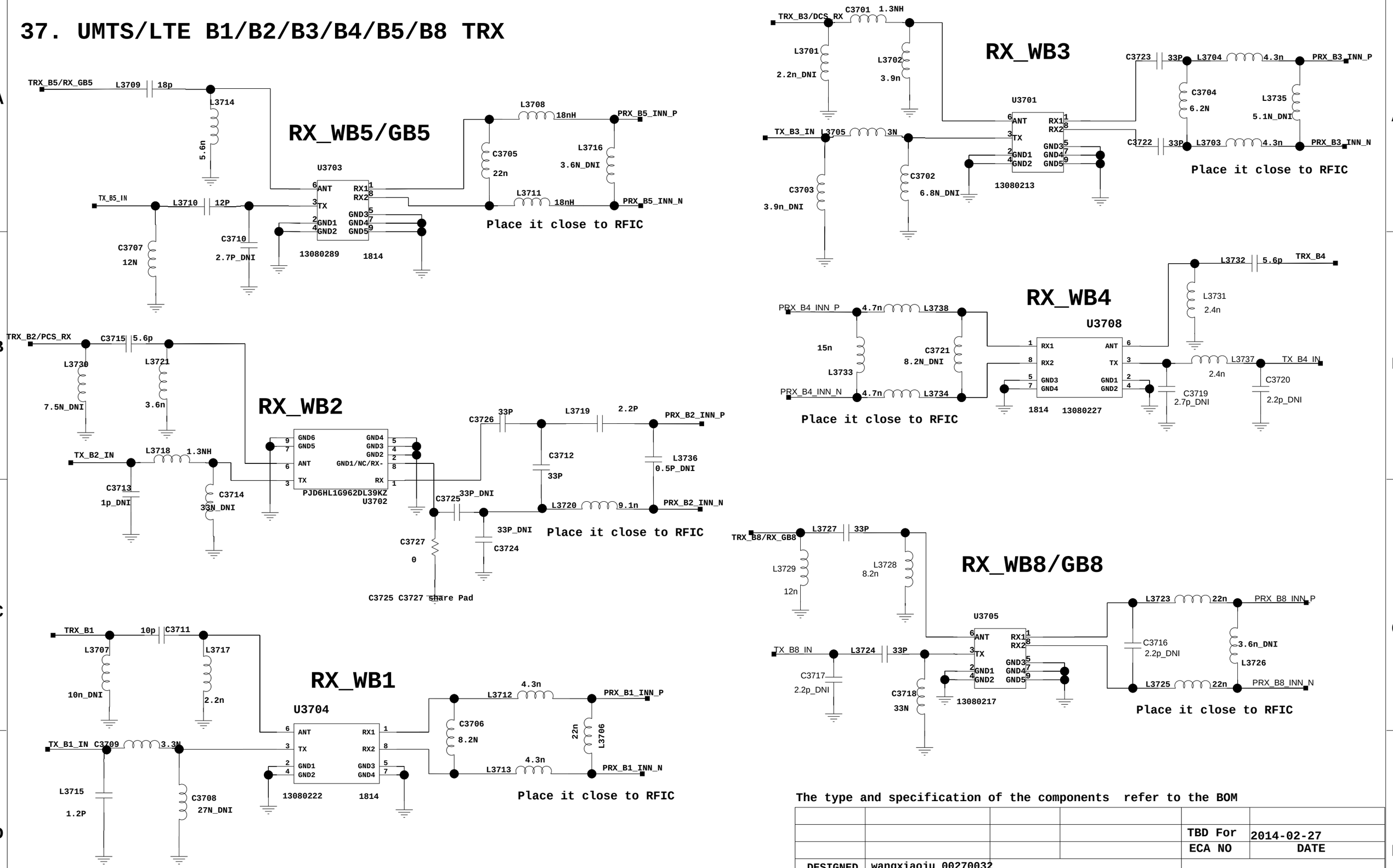

The type and specification of the components refer to the BOM

				TBD For	2014-02-27
				ECA NO	DATE
DESIGNED	wangxiaoju 00270032	HL1PINEM		03022QWC_SCHZH	
REVIEWED	xieliang 00239919				
		VER	PART_NUMBER	SHEET 37 OF 60	
		B	0302XXXX	HUAWEI TECH CO.,LTD.	

38.RF Front End MMMBPA

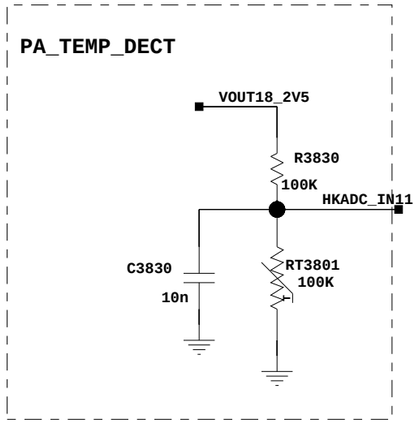

U3803 TQP9058 Truth Table

	GPIO15	GPIO14	GPIO13	GPIO16	GPIO17	GPIO18
PowerDown	0	0	X	X	X	X
2G_LB-GMSK	1	0	0	X	X	0
2G_LB-8PSK	1	0	0	X	X	1
2G_HB-GMSK	0	1	0	X	X	0
2G_HB-8PSK	0	1	0	X	X	1
3G/4G_B5-HPM	1	0	1	0	0	0
3G/4G_B5-LPM	1	0	1	0	0	1
3G/4G_B8-HPM	1	0	1	1	0	0
3G/4G_B8-LPM	1	0	1	1	0	1
3G/4G_B3-HPM	0	1	1	0	0	0
3G/4G_B3-LPM	0	1	1	0	0	1
3G/4G_B2-HPM	0	1	1	0	1	0
3G/4G_B2-LPM	0	1	1	0	1	1
3G/4G_B1-HPM	0	1	1	1	0	0
3G/4G_B1-LPM	0	1	1	1	0	1

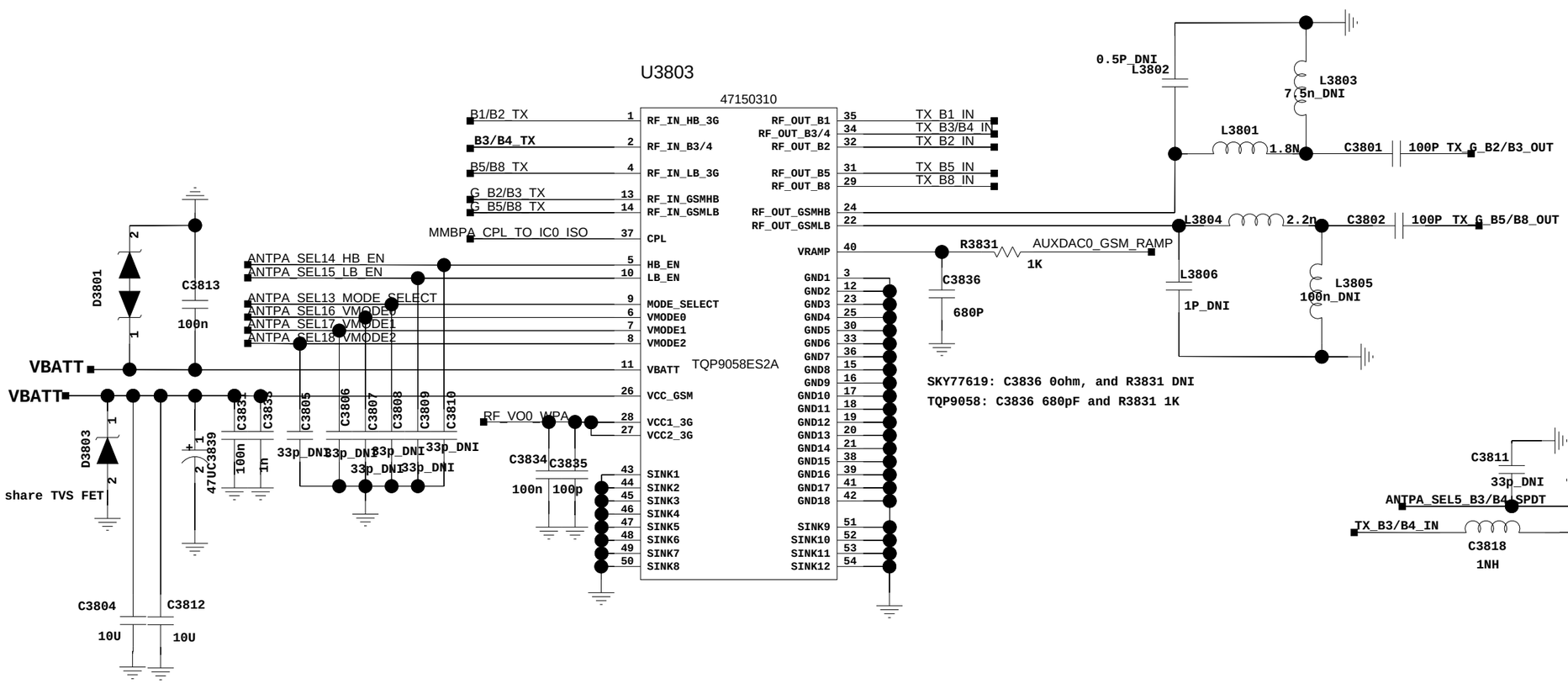

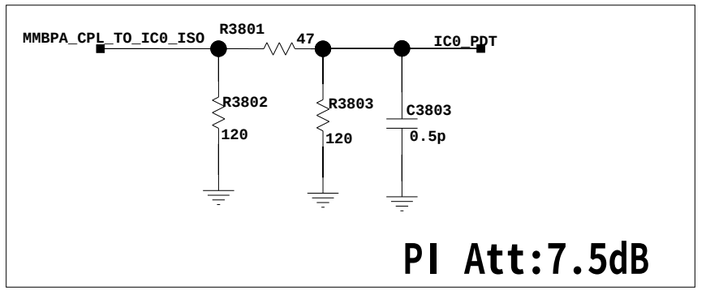

The type and specification of the components refer to the BOM

				NA	20140523
				ECA NO	DATE
DESIGNED	liumingwu 00241889	SeattleUL			
REVIEWED	wangweijie 00122033				
		VER	PART_NUMBER	SHEET 38 OF 60	
		A	03030001	HUAWEI TECH CO.,LTD.	

39. RF Front End Switch /Main ANT

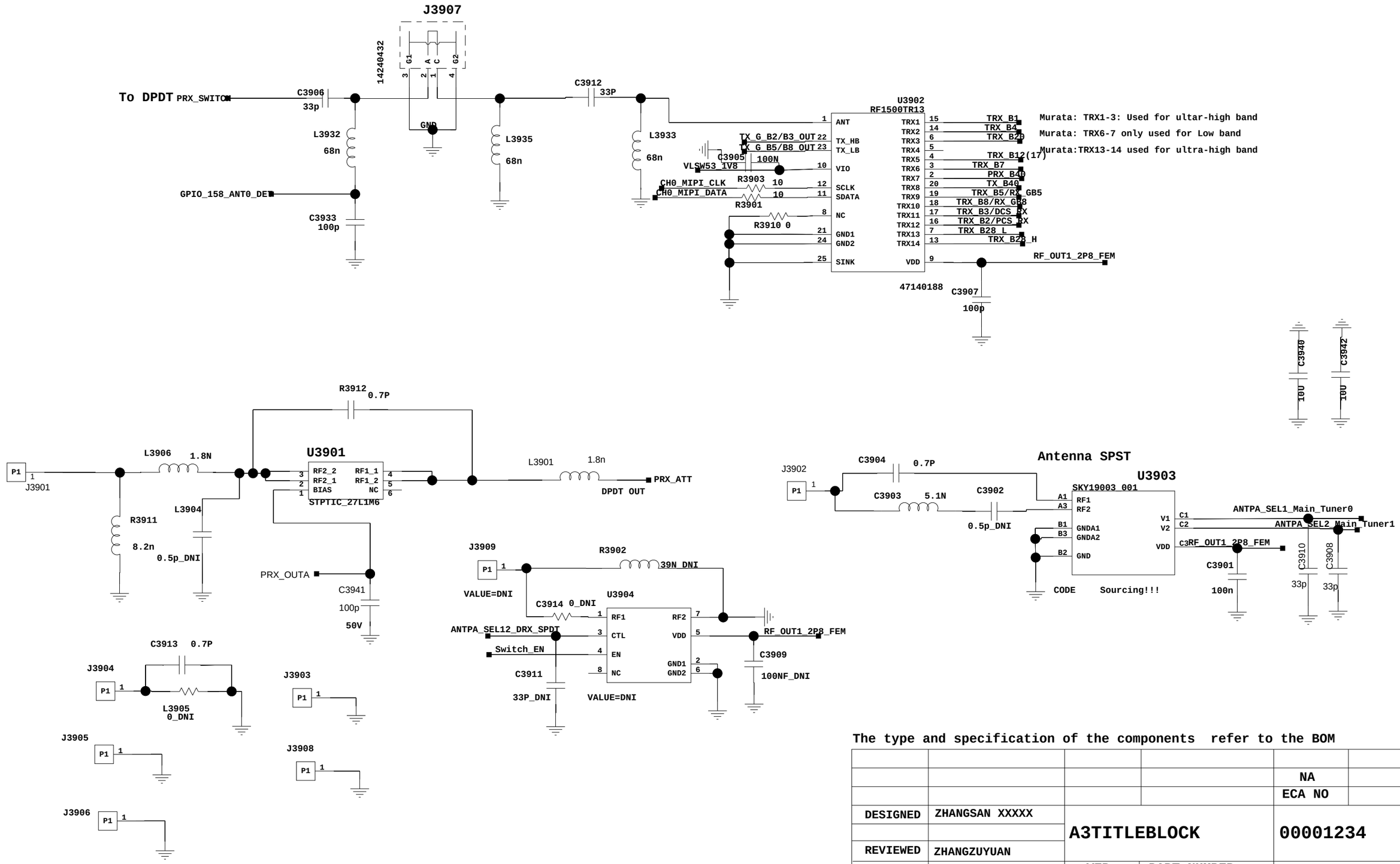

The type and specification of the components refer to the BOM

				NA	
				ECA NO	DATE
DESIGNED	ZHANGSAN XXXXX	A3TITLEBLOCK		00001234	
REVIEWED	ZHANGZUYUAN				
		VER	PART_NUMBER	SHEET 39 OF 61	
		B		HUAWEI TECH CO.,LTD.	

40. DRX B40 B7 B20 B28 B12

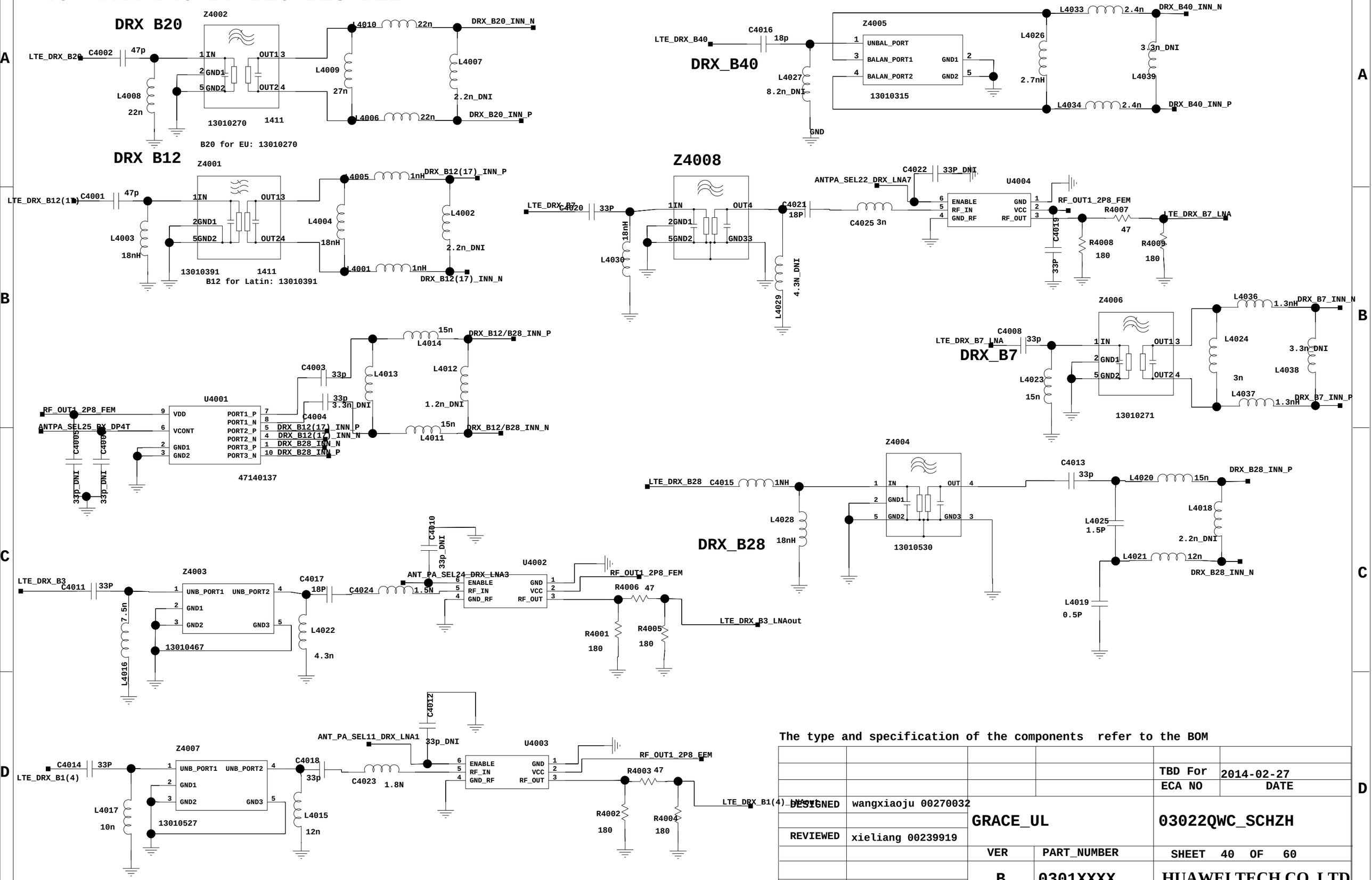

The type and specification of the components refer to the BOM

				TBD For ECA NO	2014-02-27 DATE
DESIGNED	wangxiaoju 00270032	GRACE_UL		03022QWC_SCHZH	
REVIEWED	xieliang 00239919	VER	PART_NUMBER	SHEET 40 OF 60	
		B	0301XXXX	HUAWEI TECH CO.,LTD.	

41. LTE Diversity 2

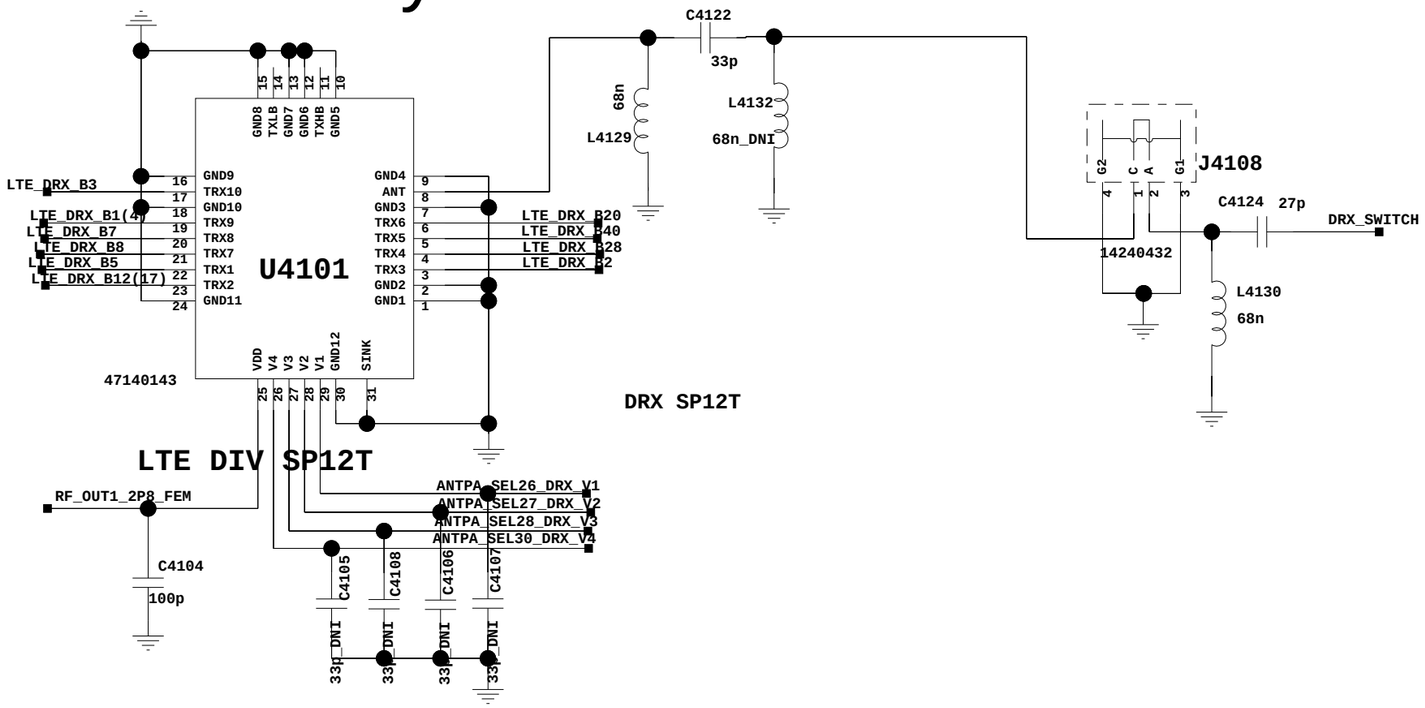

کانال ما در تلگرام

@JahanIC

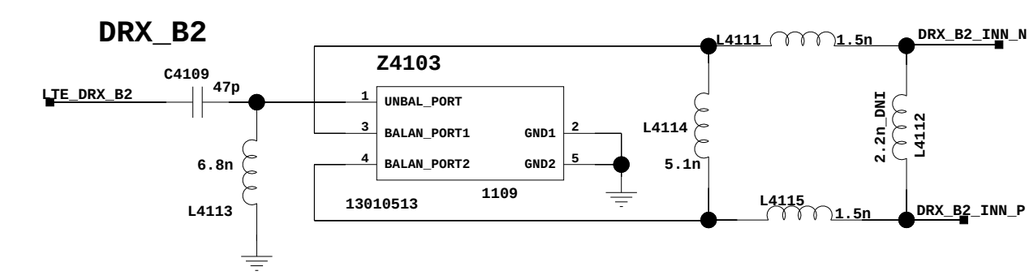

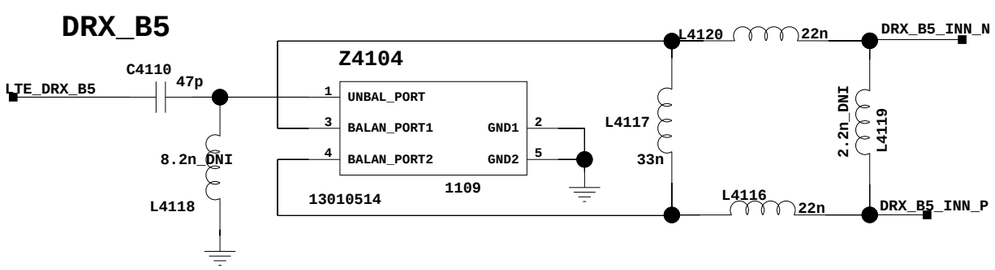

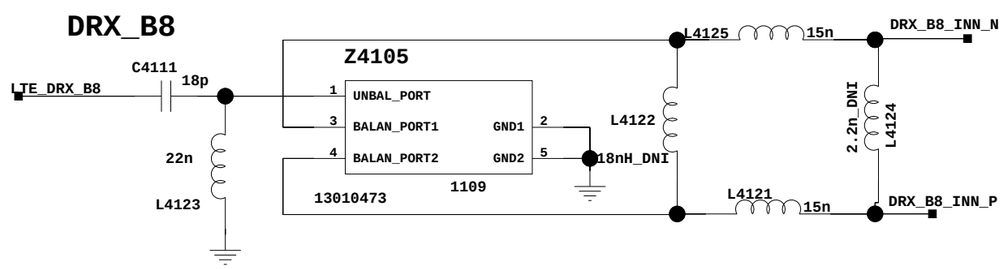

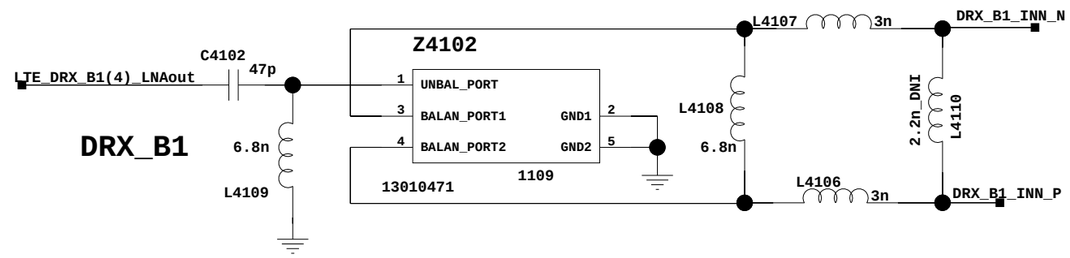

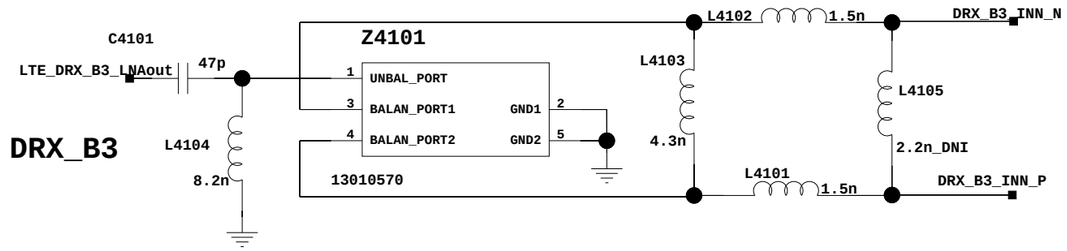

The type and specification of the components refer to the BOM

				NA	20140523
				ECA NO	DATE
DESIGNED	ZHANGSAN XXXXX	Linda_CUL		00001234	
REVIEWED	Linda Parts number	Review			
		VER	PART_NUMBER	SHEET 41 OF 60	
		A	03030001	HUAWEI TECH CO.,LTD.	

42.CDMA Modem_VIA

کانال ما در تلگرام

@JahanIC

The type and specification of the components refer to the BOM

				NA	20140523
				ECA NO	DATE
DESIGNED	liumingwu 00241889	SeattleUL			
REVIEWED	wangweijie 00122033				
		VER	PART_NUMBER	SHEET 42 OF 60	
		A	03022MYN	HUAWEI TECH CO.,LTD.	

43.CDMA Modem_VIA

کانال ما در تلگرام

@JahanIC

The type and specification of the components refer to the BOM

				NA	20140523
				ECA NO	DATE
DESIGNED	liumingwu 00241889	SeattleUL			
REVIEWED	wangweijie 00122033				
		VER	PART_NUMBER	SHEET 43 OF 60	
		A	03022MYN	HUAWEI TECH CO.,LTD.	

44.CDMA Modem_VIA

The type and specification of the components refer to the BOM

				NA	20140523
				ECA NO	DATE
DESIGNED	liumingwu 00241889	SeattleUL			
REVIEWED	wangweijie 00122033				
		VER	PART_NUMBER	SHEET 44 OF 60	
		A	03022MYN	HUAWEI TECH CO.,LTD.	

45.CDMA Modem_VIA

کانال ما در تلگرام

@JahanIC

The type and specification of the components refer to the BOM

				NA	20140523
				ECA NO	DATE
DESIGNED	liumingwu 00241889	SeattleUL			
REVIEWED	wangweijie 00122033				
		VER	PART_NUMBER	SHEET 45 OF 60	
		A	03022MYN	HUAWEI TECH CO.,LTD.	

46.CDMA RFIC

The type and specification of the components refer to the BOM

				NA	20140523
				ECA NO	DATE
DESIGNED	liumingwu 00241889	SeattleUL			
REVIEWED	wangweijie 00122033				
		VER	PART_NUMBER	SHEET 46 OF 60	
		A	03022MYN	HUAWEI TECH CO.,LTD.	

47.TX/PA

The type and specification of the components refer to the BOM

				NA	20140523
				ECA NO	DATE
DESIGNED	liumingwu 00241889	SeattleUL			
REVIEWED	wangweijie 00122033				
		VER	PART_NUMBER	SHEET 47 OF 60	
		A	03022MYN	HUAWEI TECH CO.,LTD.	

48. Diversity 2

The type and specification of the components refer to the BOM

				TBD For	2014-02-27
				ECA NO	DATE
DESIGNED	liumingwu 00241889	SeattleUL			
REVIEWED	wangweijie 00122033				
		VER	PART_NUMBER	SHEET 48	OF 60
		B	0301XXXX	HUAWEI TECH CO.,LTD.	

The type and specification of the components refer to the BOM

				NA	20140523
				ECA NO	DATE
DESIGNED	liumingwu 00241889	SeattleUL			
REVIEWED	wangweijie 00122033				
		VER	PART_NUMBER	SHEET 49 OF 60	
		0	03022KNL	HUAWEI TECH CO.,LTD.	

50 Reserved

The type and specification of the components refer to the BOM

				NA	20140523
				ECA NO	DATE
DESIGNED	liumingwu 00241889	SeattleUL			
REVIEWED	wangweijie 00122033				
		VER	PART_NUMBER	SHEET 50 OF 60	
		A	03030001	HUAWEI TECH CO.,LTD.	

51 Reserved

The type and specification of the components refer to the BOM

				NA	20140523
				ECA NO	DATE
DESIGNED	liumingwu 00241889	SeattleUL			
REVIEWED	wangweijie 00122033				
		VER	PART_NUMBER	SHEET 51 OF 60	
		A	03021000	HUAWEI TECH CO.,LTD.	

52.BT/WLAN/FM

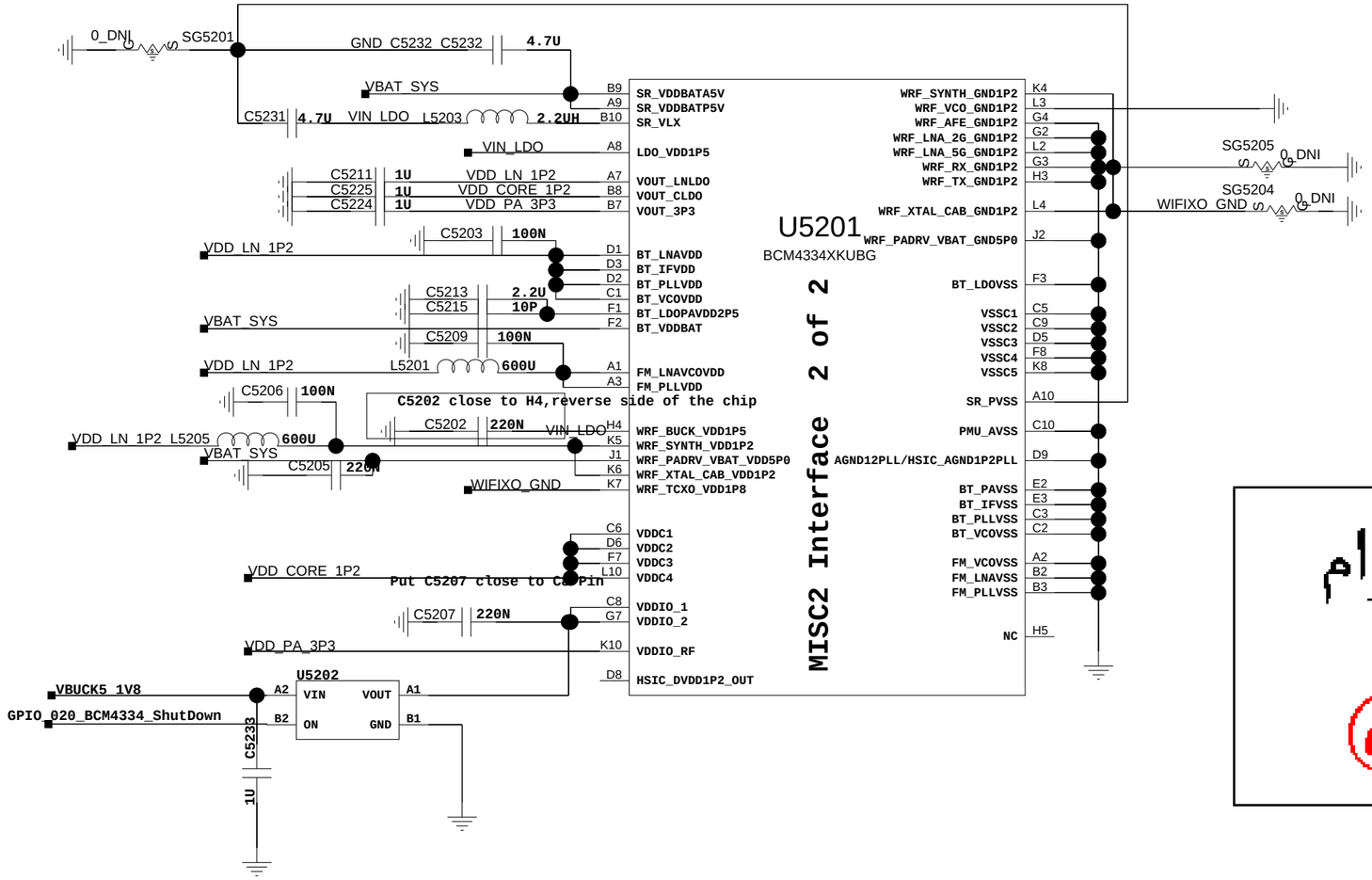

کانال ما در تلگرام

@JahanIC

The type and specification of the components refer to the BOM

				NA	20140523
				ECA NO	DATE
DESIGNED	liumingwu 00241889	GRACE_UL			
REVIEWED	wangweijie 00122033				
		VER	PART_NUMBER	SHEET 52 OF 60	
		0	03011ALH	HUAWEI TECH CO.,LTD.	

53. Connectivity(BT/WiFi/FM)-BB

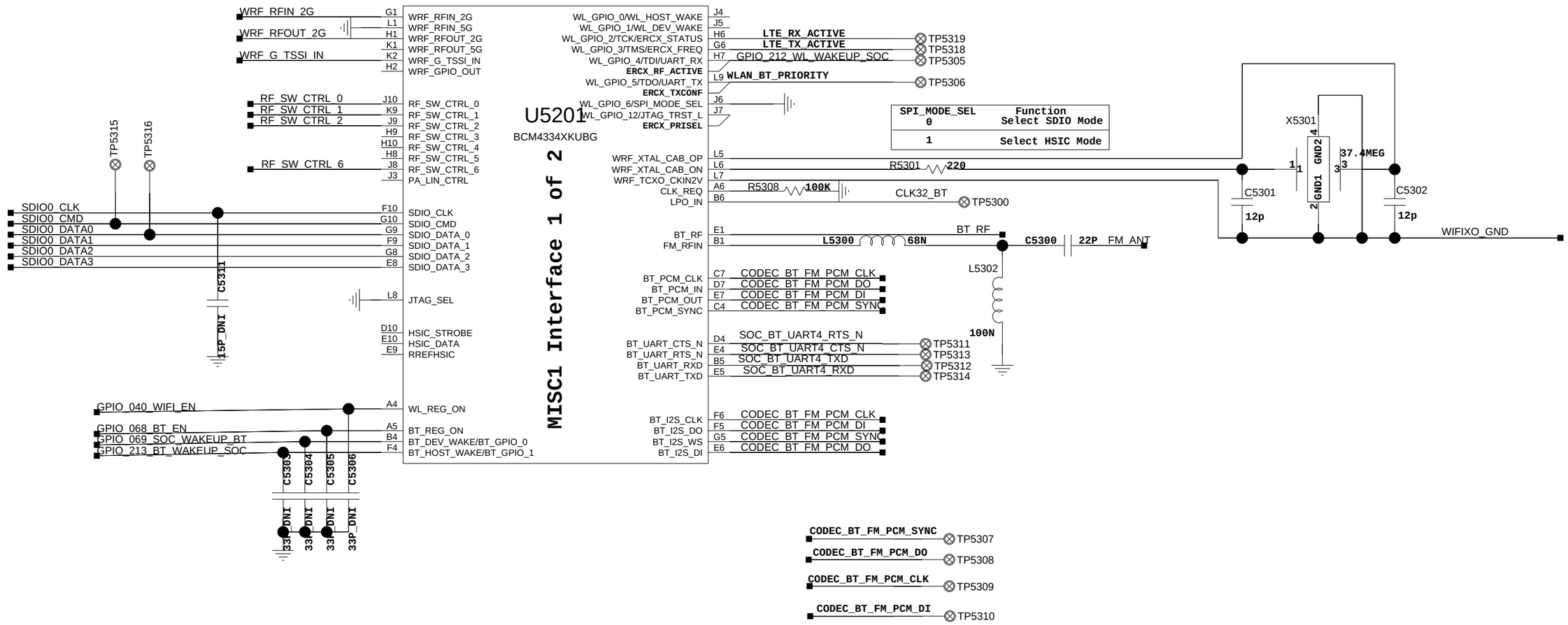

The type and specification of the components refer to the BOM

				NA	20140523
				ECA NO	DATE
DESIGNED	liumingwu 00241889	SeattleUL			
REVIEWED	wangweijie 00122033				
		VER	PART_NUMBER	SHEET 53 OF 60	
		0	03011ALH	HUAWEI TECH CO.,LTD.	

54.WIFI_RF_FrontEnd_2.4GHz

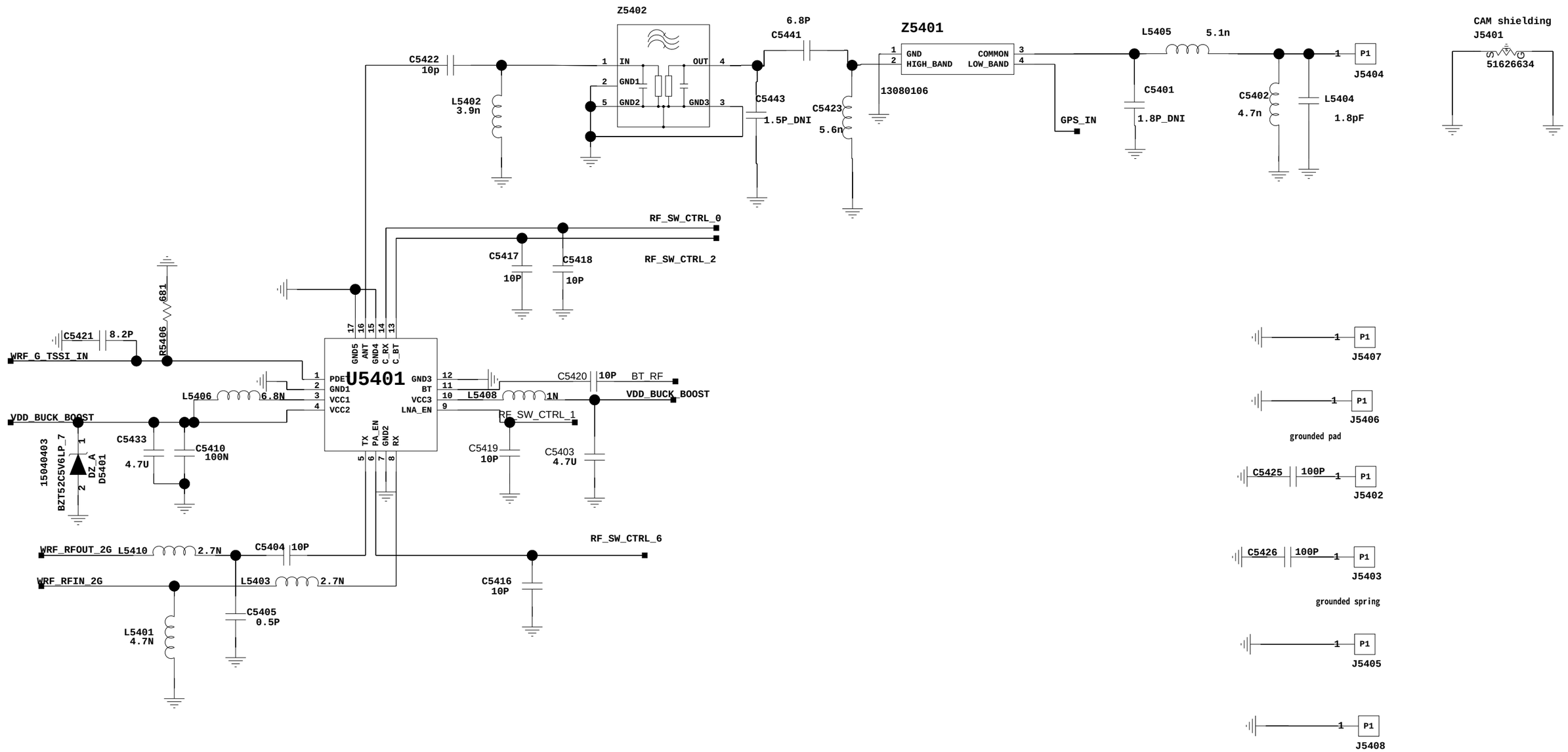

کانال ما در تلگرام

@JahanIC

The type and specification of the components refer to the BOM

				NA	20140523
				ECA NO	DATE
DESIGNED	ZHANGSAN XXXXX	Linda_CUL		00001234	
REVIEWED	Linda Parts number	Review			
		VER	PART_NUMBER	SHEET 54 OF 60	
		A	KINGKONG	HUAWEI TECH CO.,LTD.	

55. 5G wifi

کانال ما در تلگرام

@JahanIC

The type and specification of the components refer to the BOM

				NA	20140523
				ECA NO	DATE
DESIGNED	liumingwu 00241889	SeattleUL			
REVIEWED	wangweijie 00122033				
		VER	PART_NUMBER	SHEET 55 OF 60	
		A	HL1G720M	HUAWEI TECH CO.,LTD.	

56. GPS

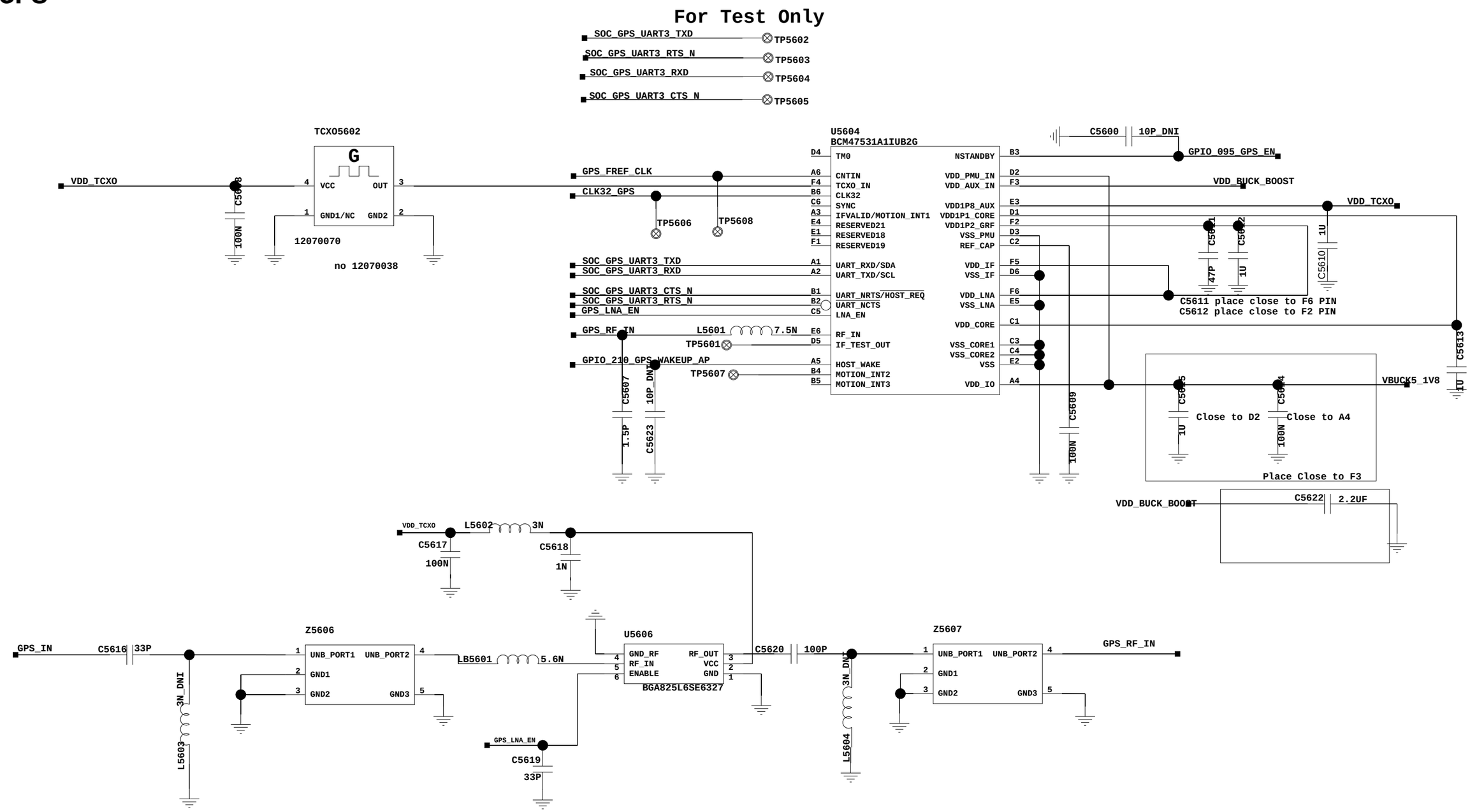

کانال ما در تلگرام

@JahanIC

The type and specification of the components refer to the BOM

				TBD For	20140523
				ECA NO	DATE
DESIGNED	wangxiaoju 00270032	GRACE_UL		03022QWC_SCHZH	
REVIEWED	Linda Parts number	Review			
		VER	PART_NUMBER	SHEET 56 OF 60	
		B	0302XXXX	HUAWEI TECH CO.,LTD.	

57.NFC

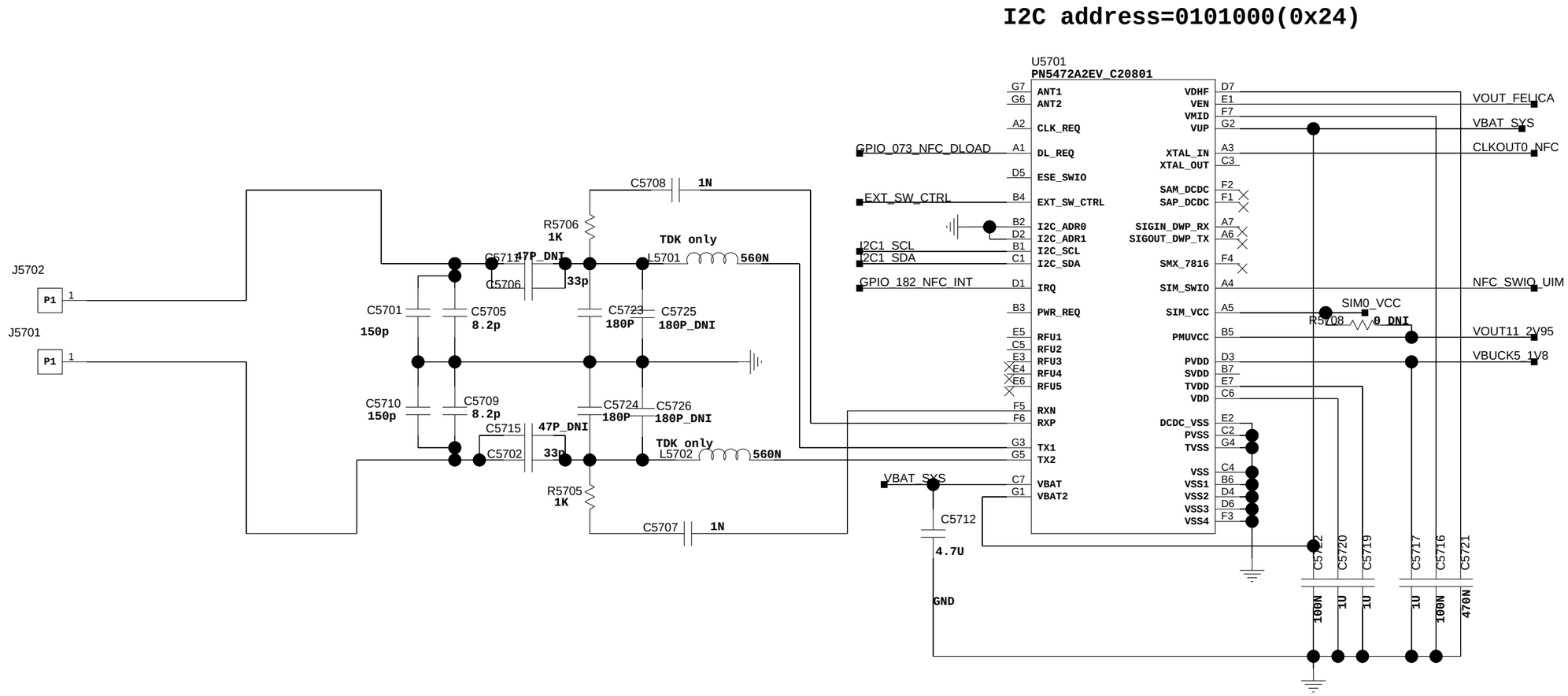

The type and specification of the components refer to the BOM

				NA	20140523
				ECA NO	DATE
DESIGNED	liumingwu 00241889	GRACE_UL			
REVIEWED	wangweijie 00122033				
		VER	PART_NUMBER	SHEET 57 OF 60	
		0	03022KNL	HUAWEI TECH CO.,LTD.	

58.RF Transceiver2

2G: G3/8

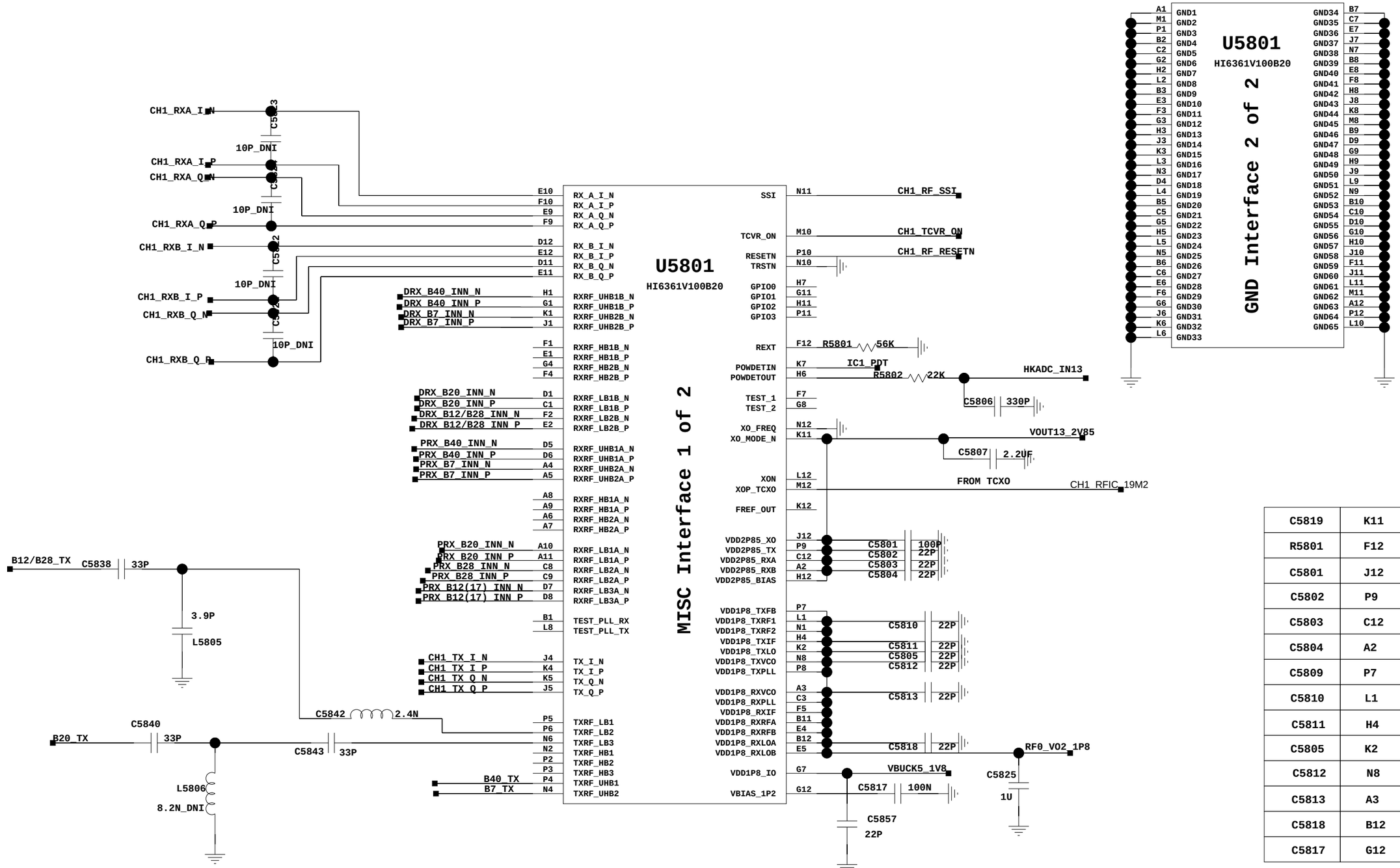

C5819	K11
R5801	F12
C5801	J12
C5802	P9
C5803	C12
C5804	A2
C5809	P7
C5810	L1
C5811	H4
C5805	K2
C5812	N8
C5813	A3
C5818	B12
C5817	G12

The type and specification of the components refer to the BOM

				NA	
				ECA NO	DATE
DESIGNED	ZXL	HL1CJAZZM		00001234	
REVIEWED	LISI XXXXX				
		VER	PART_NUMBER	SHEET 58 OF 61	
		A	03030001	HUAWEI TECH CO.,LTD.	

The type and specification of the components refer to the BOM

				TBD For	2014-02-27
				ECA NO	DATE
DESIGNED	liumingwu 00241889	SeattleUL			
REVIEWED	wangweijie 00122033				
		VER	PART_NUMBER	SHEET 59 OF 60	
		Ver.A	0301XXXX	HUAWEI TECH CO.,LTD.	

60. Reserved

The type and specification of the components refer to the BOM

				TBD For	2014-02-27
				ECA NO	DATE
DESIGNED	liumingwu 00241889	SeattleUL			
REVIEWED	wangweijie 00122033				
		VER	PART_NUMBER	SHEET 60 OF 60	
		B	0301XXXX	HUAWEI TECH CO.,LTD.	