Baseband Schematic

1. Contents
2. Block Diagramm
3. SOC PWR1
4. SOC PWR2
5. SOC PWR3
6. SOC Interface1
7. SOC Interface1
8. SOC RF Interface
9. SOC GND
10. PMU LDO
11. PMU DC-DC
12. PMU Digital
13. eMMC and DDR3
14. Battery & Fuel guage
15. USB/Charging/Switch
16. LCD Interface
17. Reserved
18. Camera Interface
19. Reserved
20. Codec/MIC/RCV
21. Audio/SPK/VIB
22. Headphone
23. Reserved
24. Reserved
25. X-Sensor1
26. X-Sensor2
27. External DC/DC
28. SIM/uSD Card
29. FPC Interface
30. Test Point/Shielding

کانال ما در تلگرام

@JahanIC

MODEM Schematic

31. RF Interface
32. RF PMU
33. RF Transceiver
34. Reserved
35. Reserved
36. Reserved
37. RF Front End LW B1/B2/B3/B5/B8 TRX
38. RF Front End MMMBPA+Switch /Main A
39. RF Front End MAIN ANT TUNNER
40. Reserved
41. Reserved
42. TCXO
43. Reserved for CDMA Modem
44. Reserved for CDMA Modem
45. Reserved for CDMA Modem
46. Reserved for CDMA Modem
47. Reserved for CDMA Modem
48. Reserved for CDMA Modem
49. RESERVED
50. RESERVED
51. Reserved
52. BT/WLAN/FM/NFC
53. BT/WLAN/FM/NFC
54. WIFI_RF_FrontEnd_2.4GHz
55. WIFI_RF_FrontEnd_5GHz
56. GPS
57. Reserved
58. RF Transceiver2
59. RFIC2_GSM PA+Switch+RX
60. RF PMU2

The type and specification of the components refer to the BOM

					04-11-2014_11:52
					20140523
				ECA NO	DATE
DESIGNED	yuanhailin/00265042	Grace_CL			
REVIEWED	wangweijie/00303684				
		VER	PART_NUMBER	SHEET 1 OF 60	
				HUAWEI TECH CO.,LTD.	

2. Block Diagramm

The type and specification of the components refer to the BOM

					04-11-2014_11:52
					20140523
				ECA NO	DATE
DESIGNED	yuanhailin/00265042	Grace_CL			
REVIEWED	wangweijie/00303684				
		VER	PART_NUMBER	SHEET 2 OF 60	
		B		HUAWEI TECH CO.,LTD.	

3. SOC PWR1

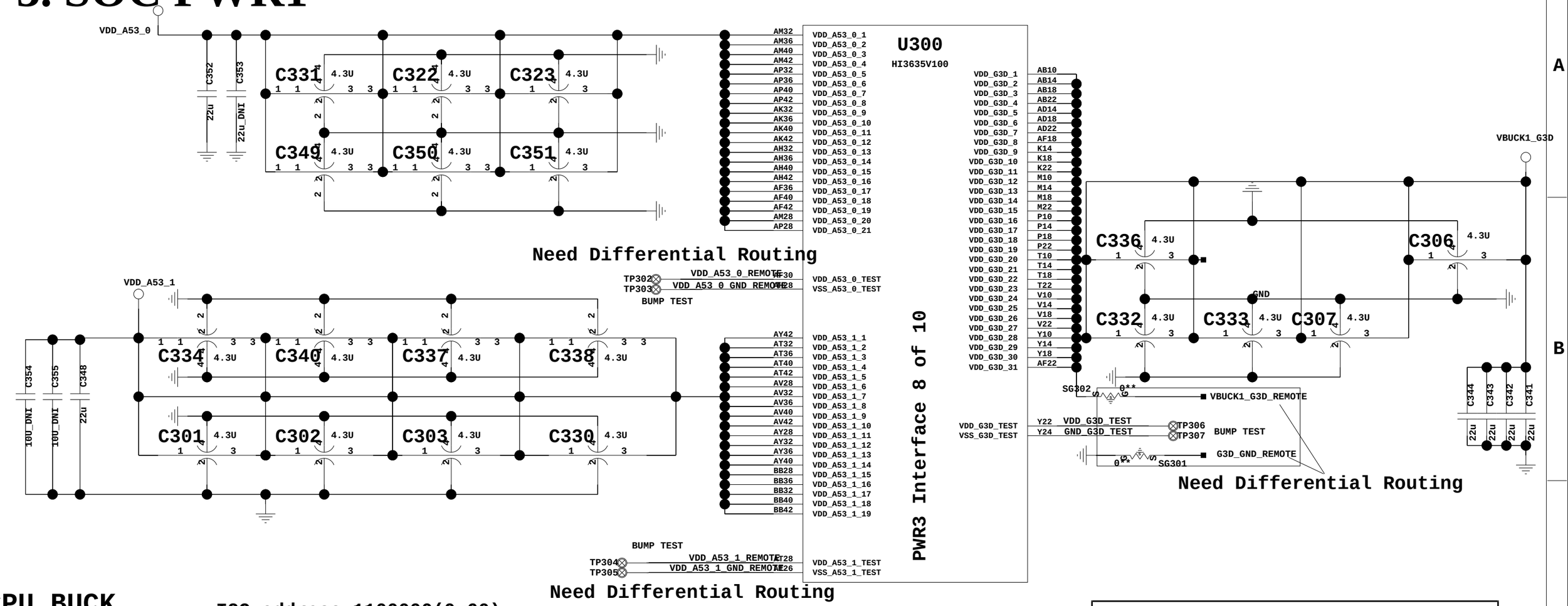

CPU BUCK

I2C address=1100000(0x60)

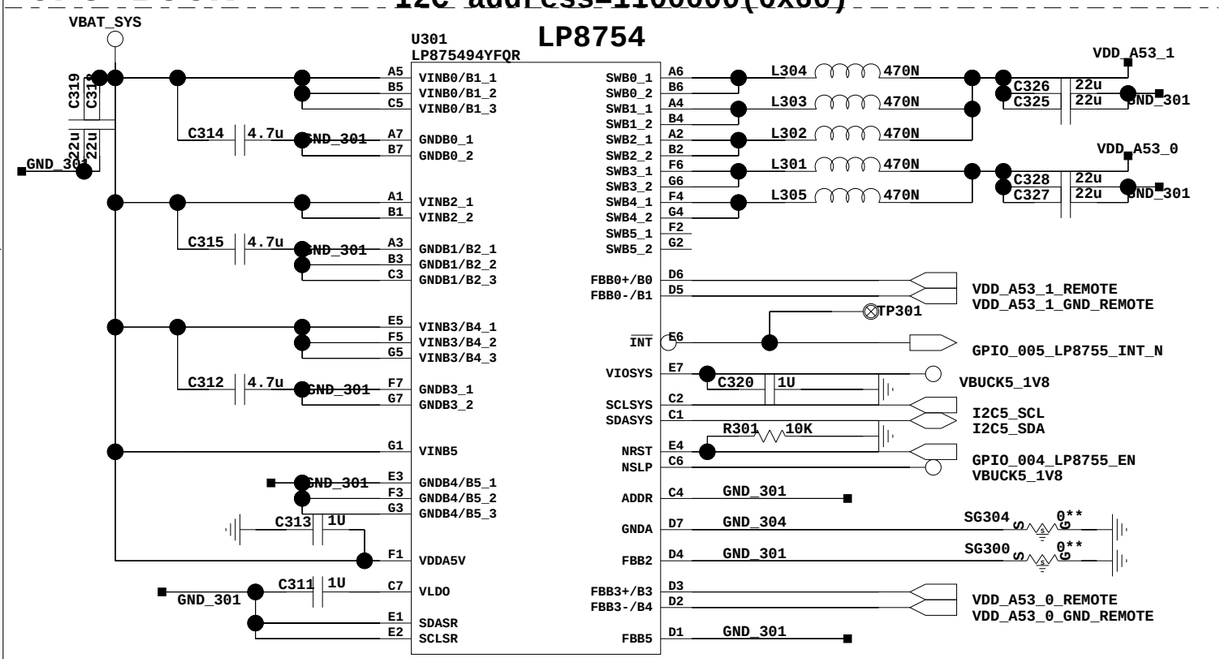

کانال ما در تلگرام

@JahanIC

The type and specification of the components refer to the BOM

					05-12-2014_10:04
				TBD For	20140523
				ECA NO	DATE
DESIGNED	yuanhailin/00265042	Grace_CL		03022NKM_SCHZH	
REVIEWED	wangweijie/00303684				
		VER	PART_NUMBER	SHEET 3 OF 60	
		B	03011DVT	HUAWEI TECH CO.,LTD.	

4. SOC PWR2

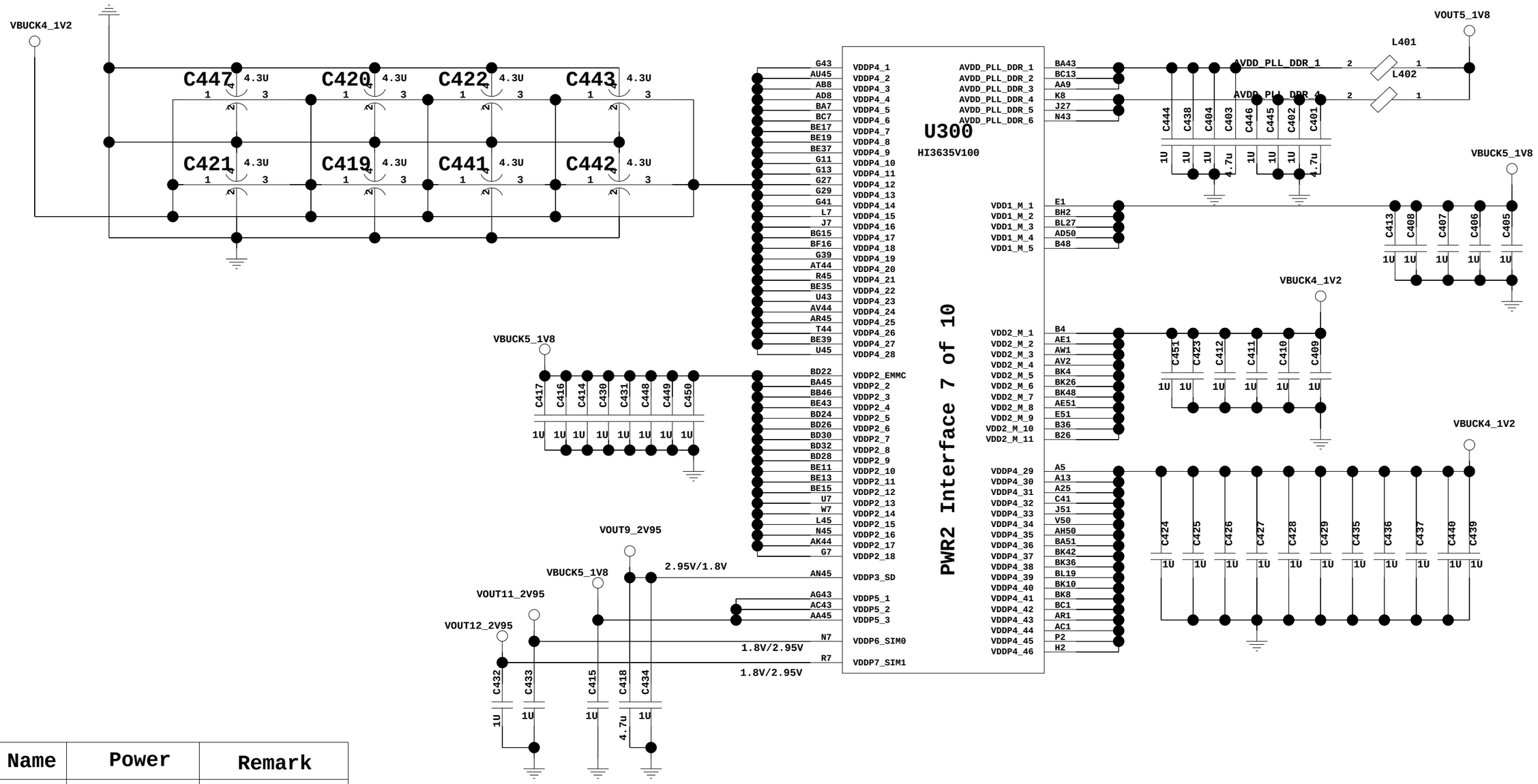

Name	Power	Remark
VDDP2	1.8V	OTHER I/O
VDDP3	2.95V/1.8V	SD I/F I/O
VDDP4	1.2V	DDR I/O
VDDP5	1.8V	SYSTEM I/O
VDDP6	1.8V/2.95V	USIM0 I/O
VDDP7	1.8V/2.95V	USIM1 I/O

The type and specification of the components refer to the BOM

					03-12-2014_11:25
				TBD For	20140523
				ECA NO	DATE
DESIGNED	yuanhailin/00265042	Grace_CL		03022NKM_SCHZH	
REVIEWED	wangweijie/00303684				
		VER	PART_NUMBER	SHEET 4 OF 60	
		B	03011DVT	HUAWEI TECH CO.,LTD.	

5. SOC PWR3

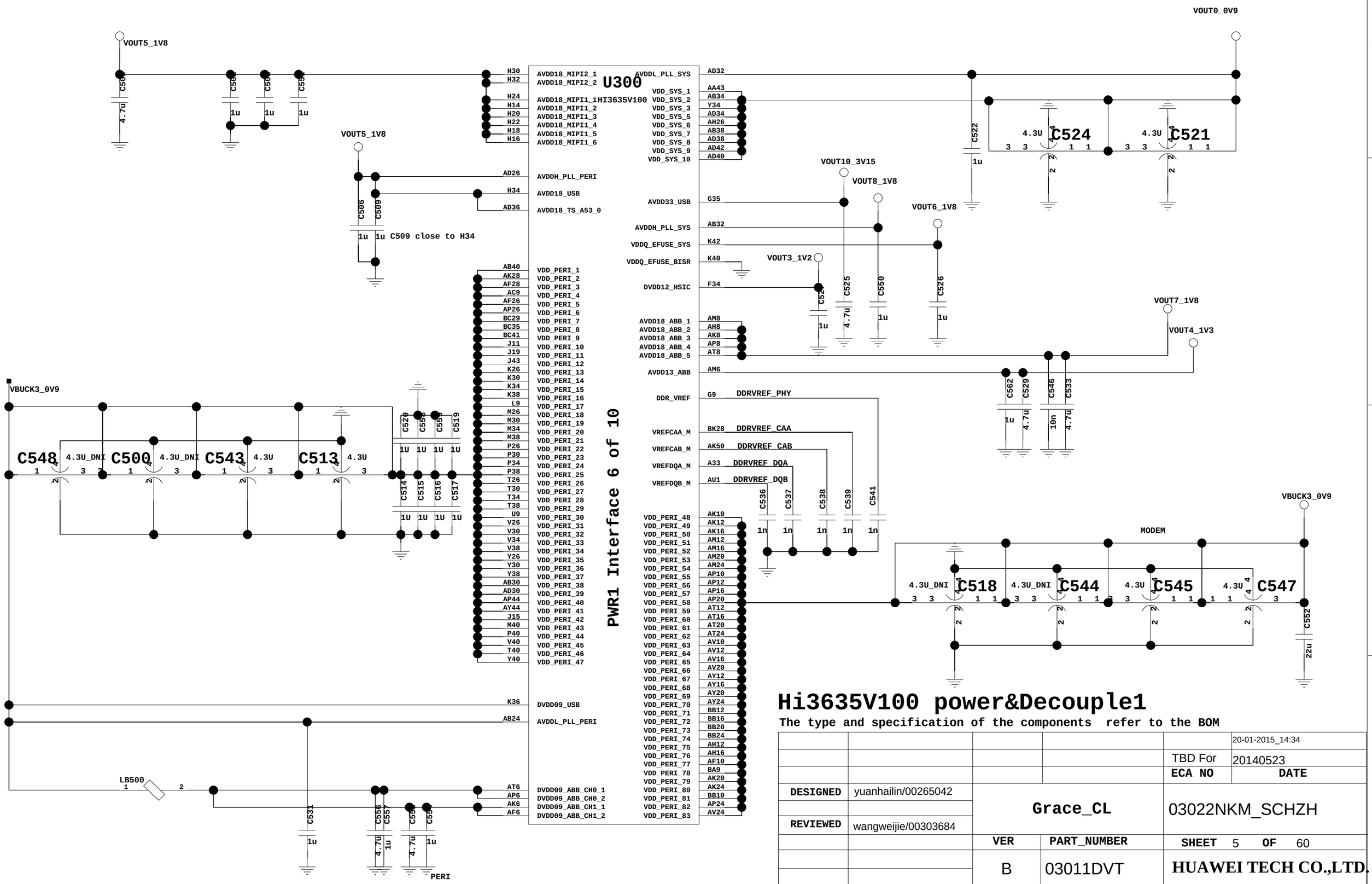

Hi3635V100 power&Decouple1

The type and specification of the components refer to the BOM

					20-01-2015_14:34
				TBD For	20140523
				ECA NO	DATE
DESIGNED	yuanhailin/00265042	Grace_CL		03022NKM_SCHZH	
REVIEWED	wangweijie/00303684				
		VER	PART_NUMBER	SHEET 5 OF 60	
		B	03011DVT	HUAWEI TECH CO.,LTD.	

6. SOC Interface1

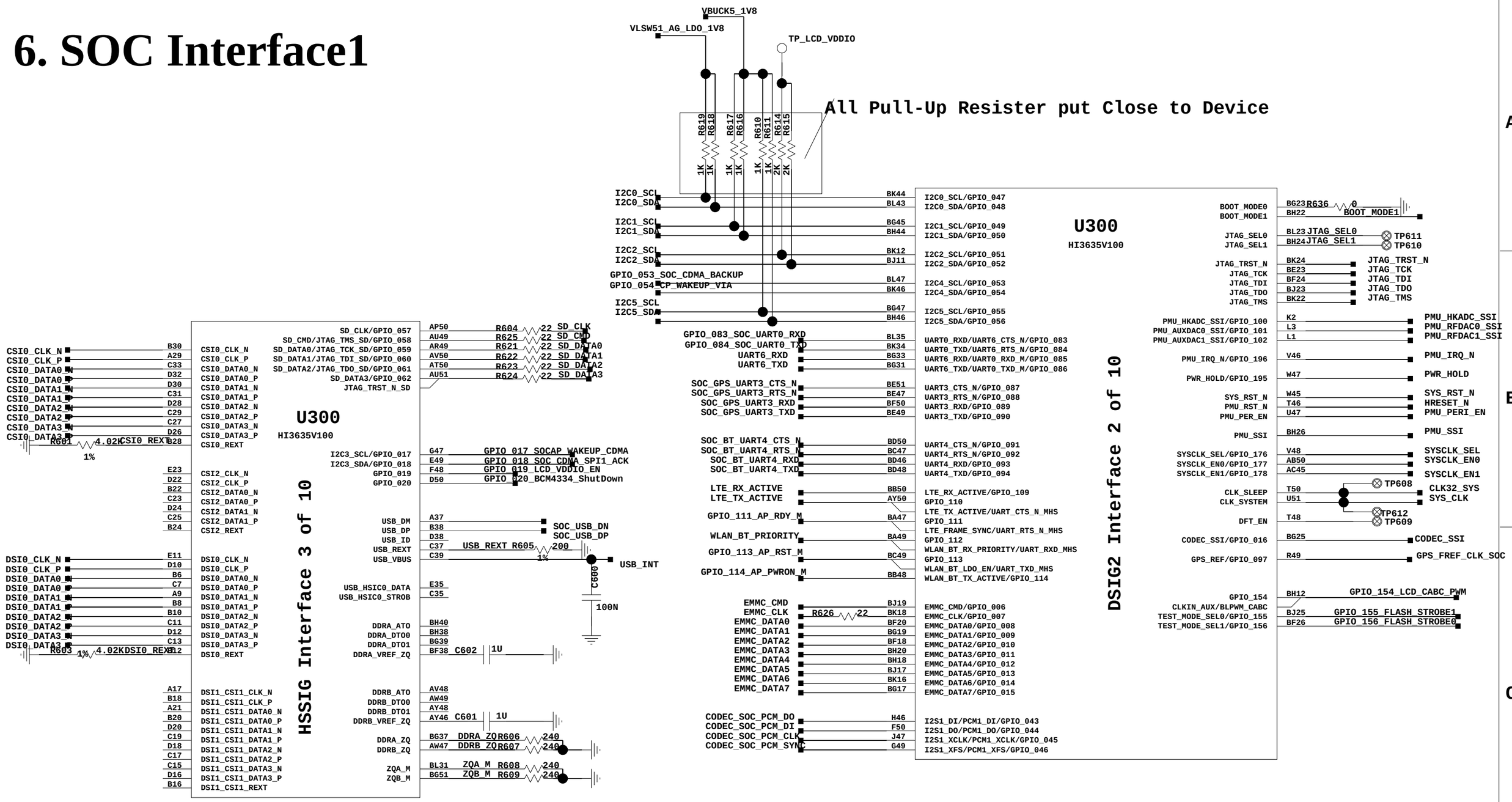

Hi3630v100 high speed siganl

Boot_mode[1:0]	Function
00	Bootrom start-Download
01	Bootrom start-FAC Test
10	Bootrom start-eMMC
11	EX-Nand Boot only for ATE

JTAG Selection setting

SEL1(IPD)	SEL0(IPU)	FUNCTION
0	0	BSD TAP Controller
0	1	DJTAG TAP Controller
1	0	CoreSight & DSP JTAG
1	1	AUTH JTAG

The type and specification of the components refer to the BOM

					06-12-2014_14:54
				TBD For	20140523
				ECA NO	DATE
DESIGNED	yuanhailin/00265042	Grace_CL		03022NKM_SCHZH	
REVIEWED	wangweijie/00303684				
		VER	PART_NUMBER	SHEET 6 OF 60	
		B	03011DVT	HUAWEI TECH CO.,LTD.	

7.SOC Interface2

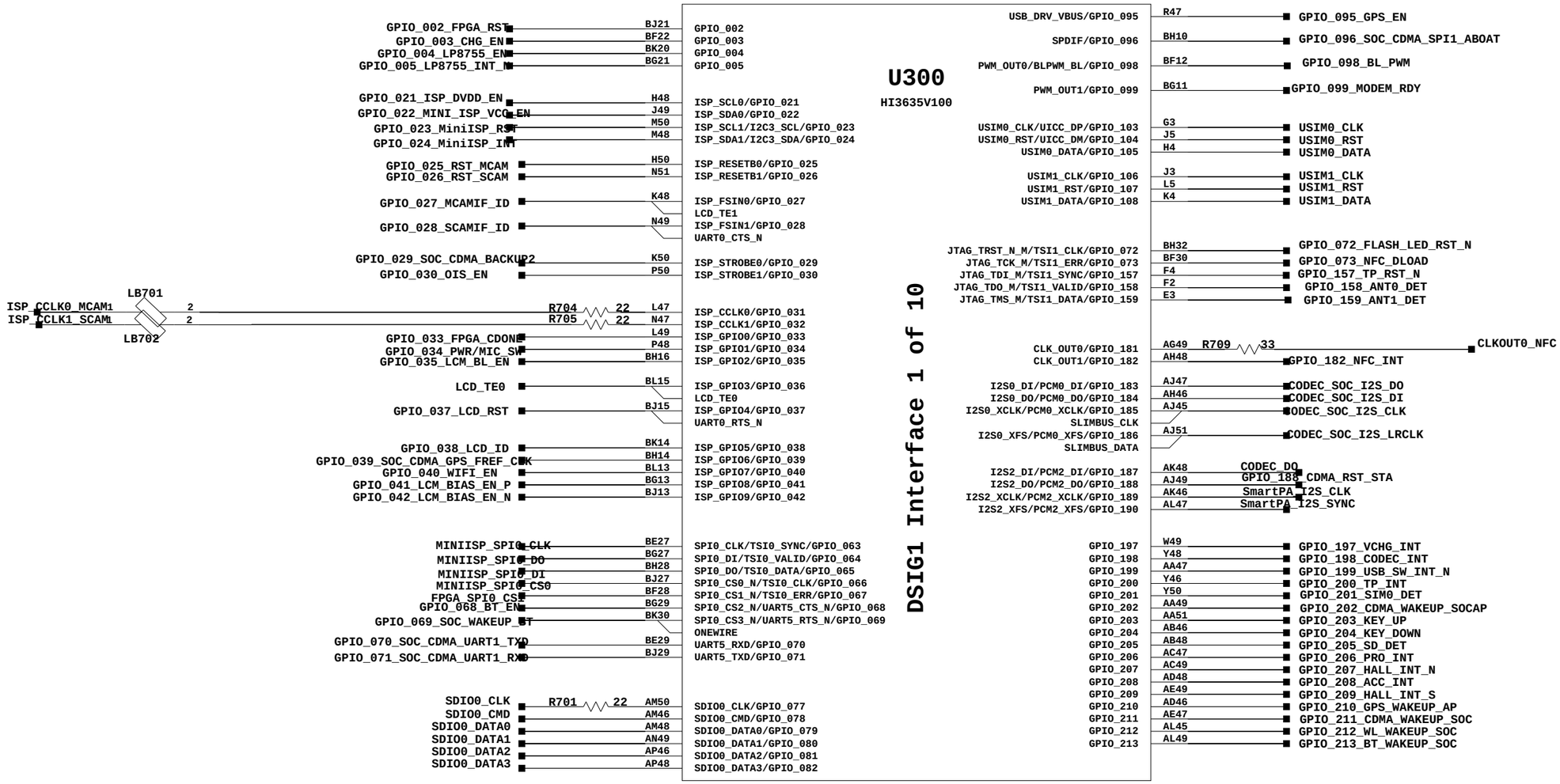

The type and specification of the components refer to the BOM

					24-01-2015_12:59
				TBD For	20140523
				ECA NO	DATE
DESIGNED	yuanhailin/00265042	Grace_CL		03022NKM_SCHZH	
REVIEWED	wangweijie/00303684				
		VER	PART_NUMBER	SHEET 7 OF 60	
		B	03011DVT	HUAWEI TECH CO.,LTD.	

8. SOC RF Interface

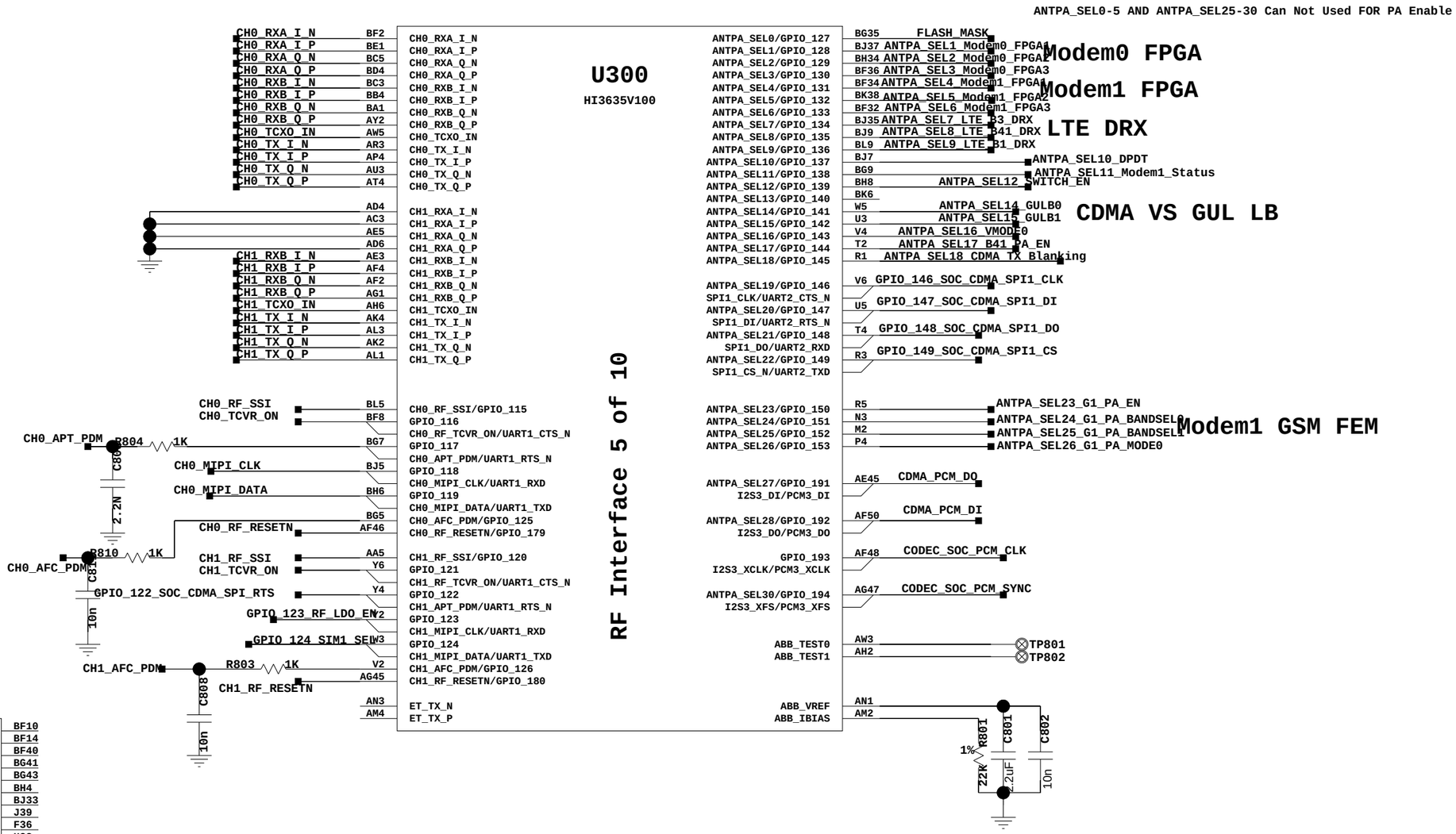

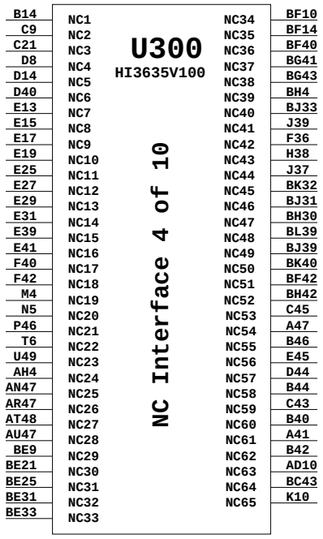

کانال ما در تلگرام

@JahanIC

The type and specification of the components refer to the BOM

					07-01-2015_15:11
				TBD For	20140523
				ECA NO	DATE
DESIGNED	yuanhailin/00265042	Grace_CL		03022NKM_SCHZH	
REVIEWED	wangweijie/00303684				
		VER	PART_NUMBER	SHEET 8	OF 60
		B	03011DVT	HUAWEI TECH CO.,LTD.	

9. SOC GND

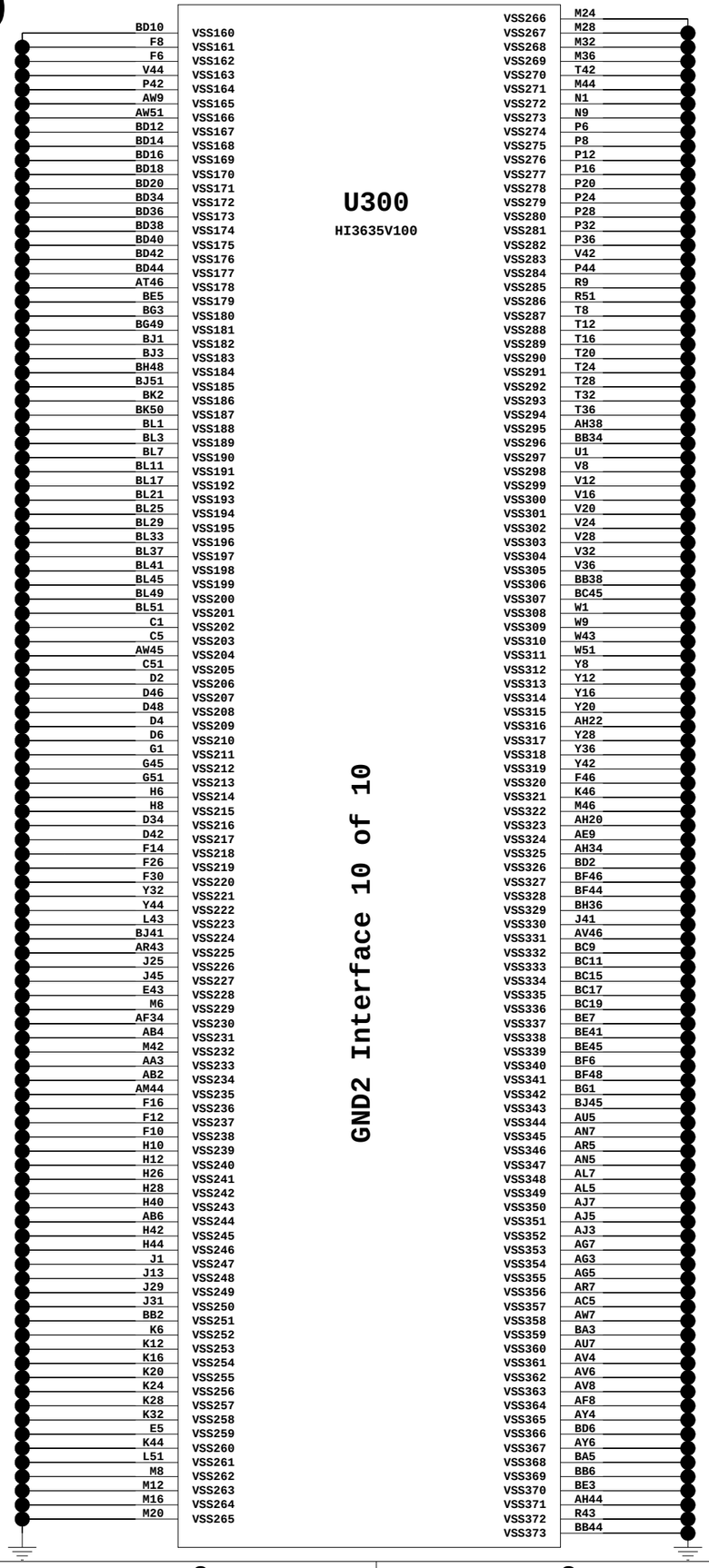

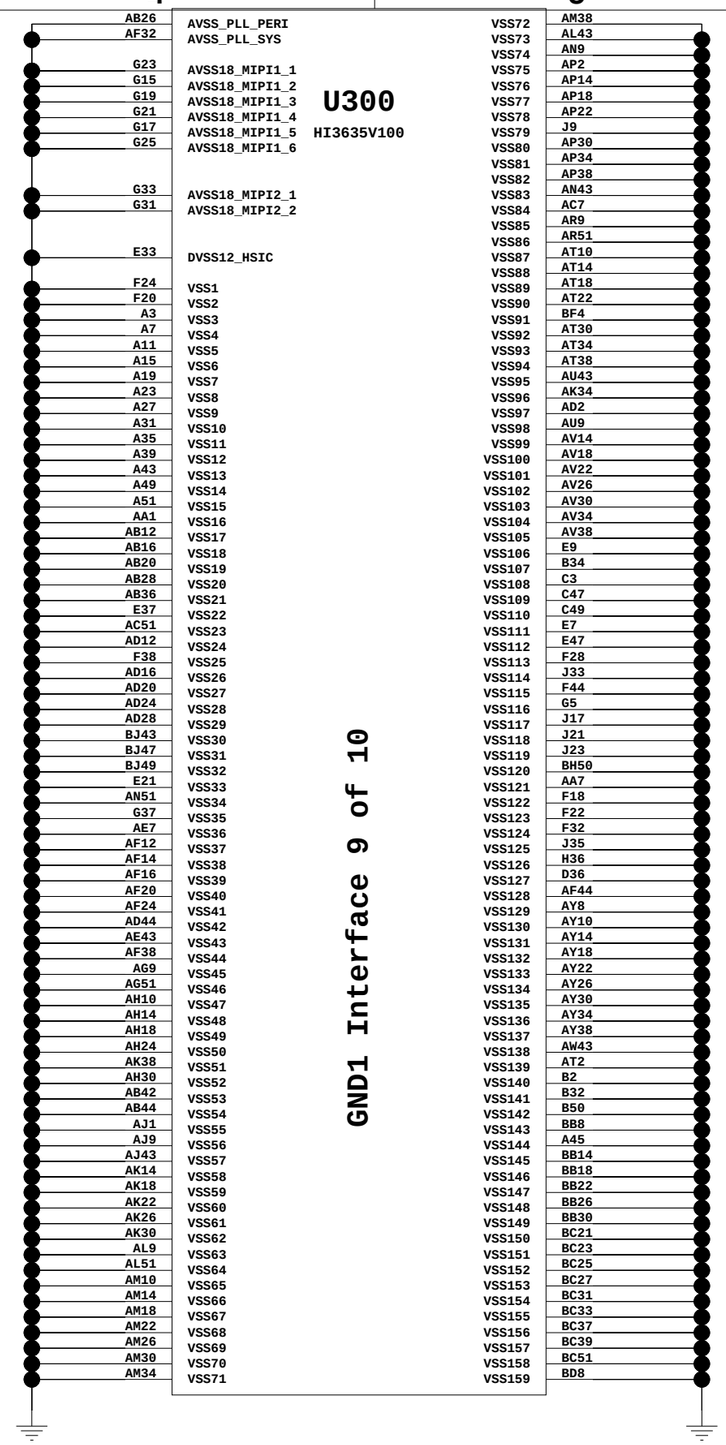

The type and specification of the components refer to the BOM

					04-11-2014_11:52
				TBD For	20140523
				ECA NO	DATE
DESIGNED	yuanhailin/00265042	Grace_CL		03022NKM_SCHZH	
REVIEWED	wangweijie/00303684				
		VER	PART_NUMBER	SHEET 9 OF 60	
		B	03011DVT	HUAWEI TECH CO.,LTD.	

10. PMU LDO

Power Management Table

NAME	Voltage	Current	Function
VDD_A53_0	0.9V	3.7A	A53 LITTLE core
VDD_A53_1	0.9V	6.5A	A53 BIG core
VBUCK1/2	0.9V	6.0A	GPU core
VBUCK3	0.9V	3.0A	PERI & MDM & BBP
VBUCK4	1.2V	3.0A	DDR & 1.2V power plane
VBUCK5	1.8V	1.5A Hi3635	I/O & 1.8V power plane
VBUCK6	2.15V	1.5A	2.15V power plane
VOUT0	0.9V	300mA	Hi3635 SYS + 0.9V PLL
VOUT1	0.9V	350mA	NC
VOUT2	0.9V	800mA	NC
VOUT3	1.2V	50mA	HSIC
VOUT4	1.3V	100mA	AVDDL_ABB
VOUT5	1.8V	500mA	PHY 1.8V POWER
VOUT6	1.8V	150mA	EFUSE
VOUT7	1.8V	100mA	AVDDH_ABB & AVDD1P8_PLL
VOUT8	1.8V	300mA	CODEC 1.8V analog
VOUT9	2.95V/1.8V	50mA	Hi3635 SD CARD I/O
VOUT10	3.15V	50mA	USB PHY
VOUT11	1.8V/2.95V	50mA	SIM 0
VOUT12	1.8V/2.95V	50mA	
VOUT13	2.85V	50mA	19.2M TCXO 0 & BUFFER
VOUT14	2.85V	50mA	19.2M TCXO 1 & BUFFER
VOUT15	2.95V	350mA	EMMC AVDD
VOUT16	2.85V	600mA	SD CARD
VOUT17	3.1V	50mA	TP AVDD
VOUT18	2.5V	50mA	HKADC REF
VOUT19	2.8V	200mA	S_CAM analog
VOUT20	1.0V	350mA	M_CAM core
VOUT21	2.8V	200mA	M_CAM analog
VOUT22	1.2V	200mA	
VOUT23	3.0V	50mA	HKADC & AUX DAC
VOUT24	2.8V	50mA	X-Sensor AVDD
VOUT25	2.85V	300mA	MCAM VCM
VOUT26	1.8V	50mA	19.2M circuit & CLK buffer
VOUT_FELICA	3.15V	100mA	NFC
VBOOST	5.0V	1.5A/600mA	CLASS-D PA
VLSW50	1.8V	50mA	LCD_TP I/O
VLSW51	1.8V	50mA	IRDA I/O
VLSW52	1.8V	60mA	CAM I/O
VLSW53	1.8V	50mA	PA VDD_EN

IN7 Power for LDO_PMUD/Felica/25/26/VCOIN
VIN_1P2 Power for LDO0_2/LDO1/LDO2
VIN_1P8 Power for LDO3/4/LDO20/LDO22
VIN_1P8 Power for LSW50-LSW53
VIN_2P15 Power for LDO5-LDO8
VIN_3P3 Power for LDO9-19/21/23/24

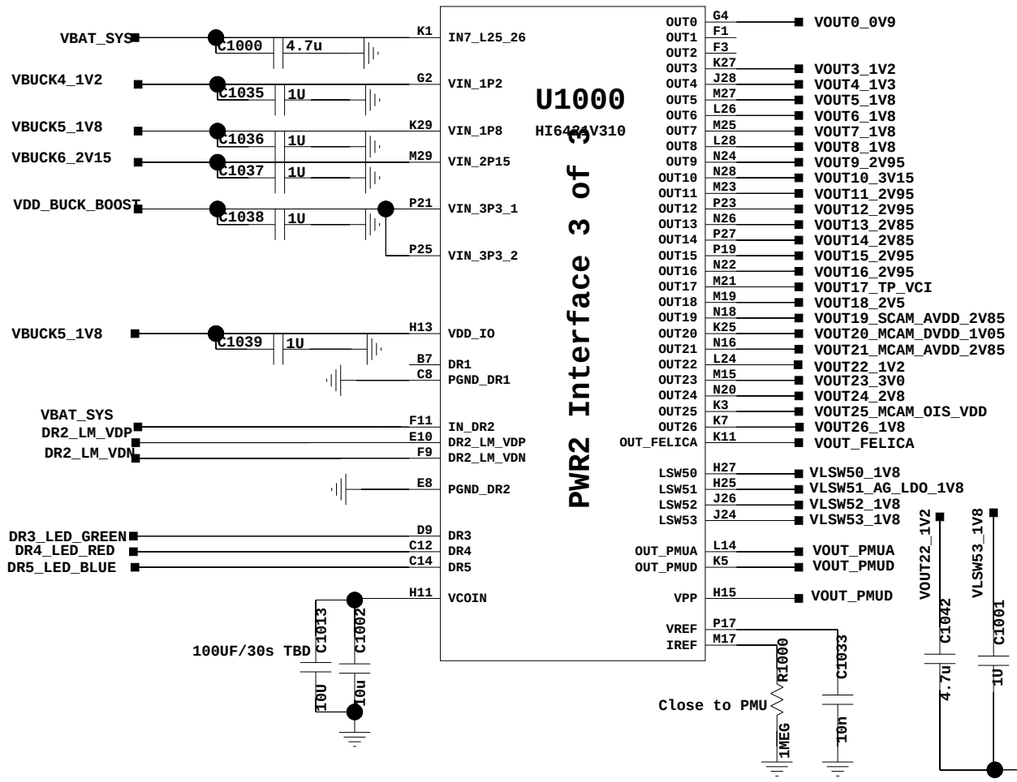

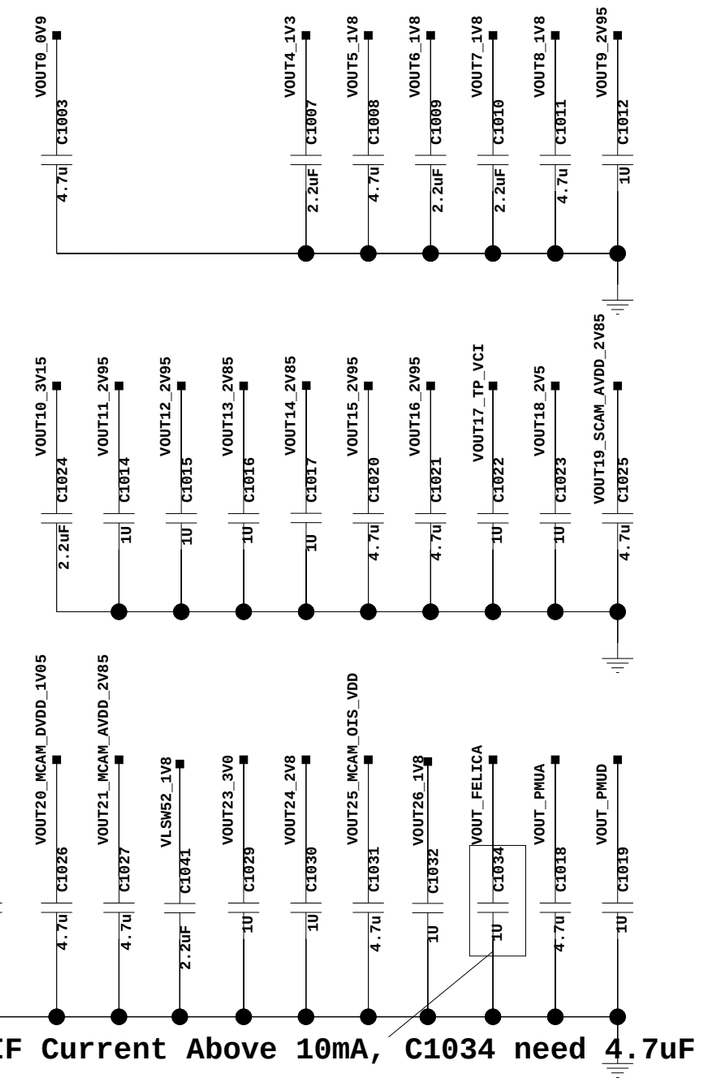

Hi6421 Power Management

The type and specification of the Components refer to the BOM

					24-01-2015_13:03
				TBD For	20140523
				ECA NO	DATE
DESIGNED	yuanhailin/00265042	Grace_CL		03022NKM_SCHZH	
REVIEWED	wangweijie/00303684				
		VER	PART_NUMBER	SHEET 10 OF 60	
		B	03011DVT	HUAWEI TECH CO.,LTD.	

11. PMU DC-DC

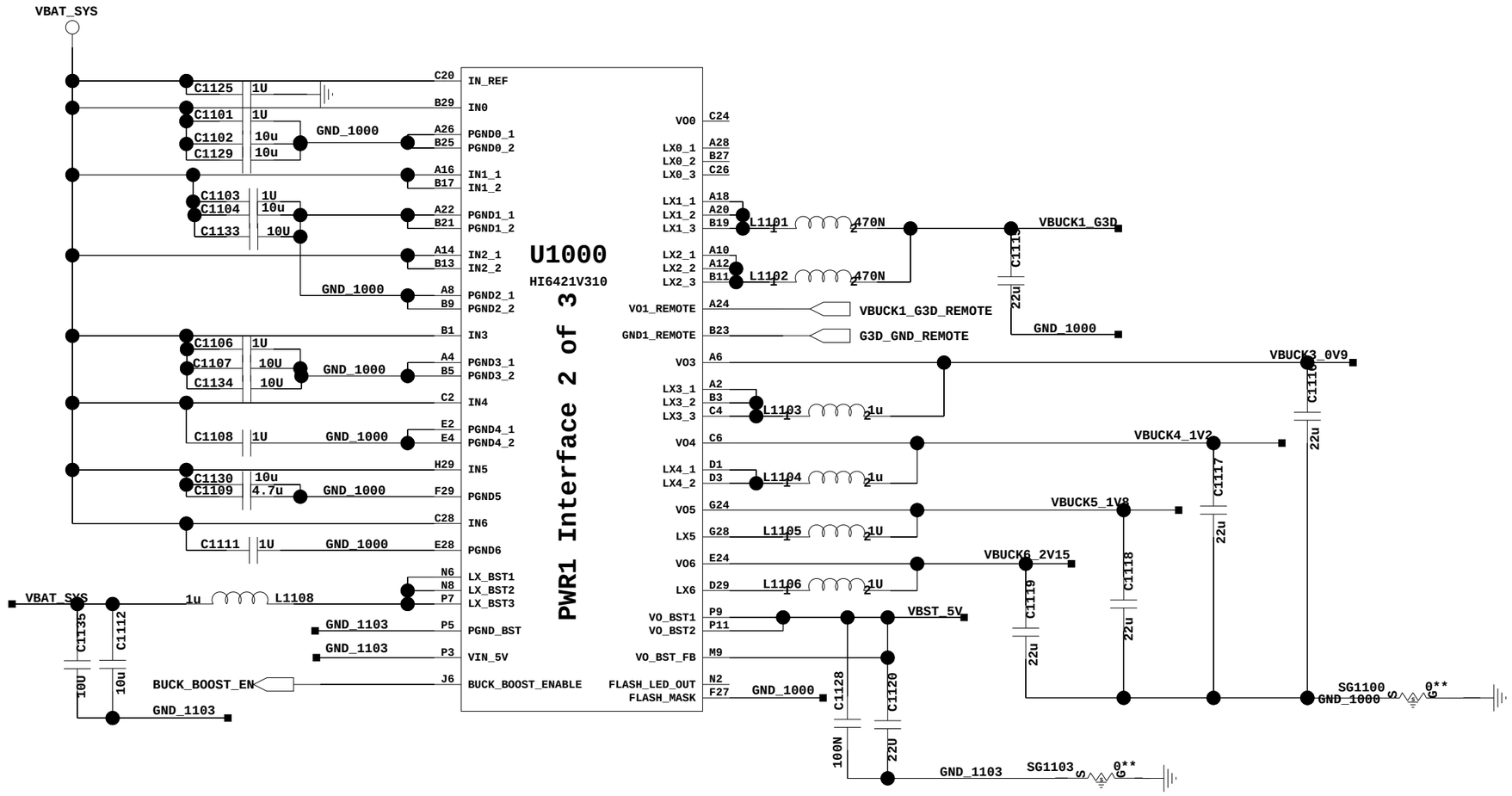

BUCK BOOST

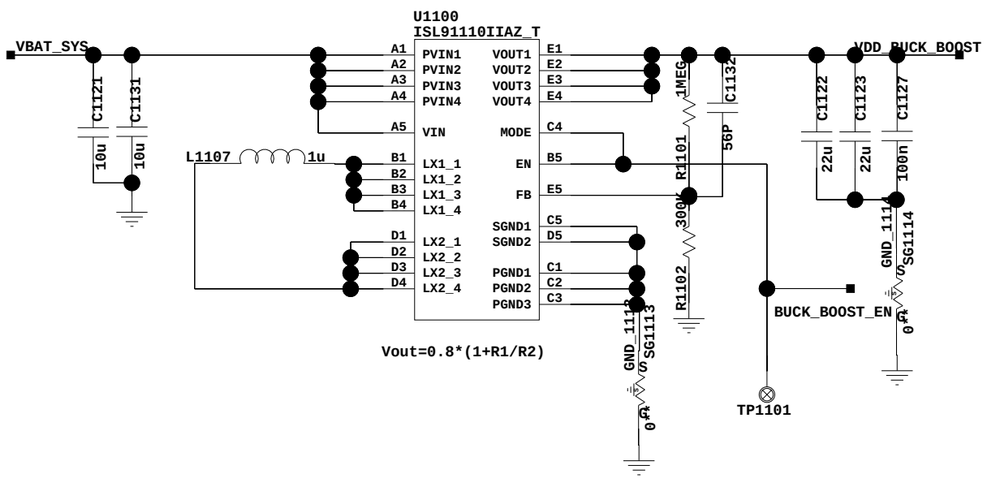

کانال ما در تلگرام

@JahanIC

The type and specification of the components refer to the BOM

					05-12-2014_19:16
				TBD For	20140523
				ECA NO	DATE
DESIGNED	yuanhailin/00265042	Grace_CL		03022NKM_SCHZH	
REVIEWED	wangweijie/00303684				
		VER	PART_NUMBER	SHEET 11 OF 60	
		B	03011DVT	HUAWEI TECH CO.,LTD.	

12. PMU Digital

HKADC Table

NAME	Function
HKADC_IN0	board ID detect0
HKADC_IN1	board ID detect1
HKADC_IN2	board ID detect2
HKADC_IN3	detect temperature of AP
HKADC_IN4	detect LCD_VSP
HKADC_IN5	
HKADC_IN6	battery ID
HKADC_IN7	detect temperature of Battery
HKADC_IN8	detect temperature of RFIC2 PA
HKADC_IN9	detect Flash Led temperature
HKADC_IN10	detect TP_LCD_VDDIO
HKADC_IN11	detect temperature of RFIC1 PA
HKADC_IN12	detect temperature of Charge IC
HKADC_IN13	
HKADC_IN14	detect transceiver1 PA power
HKADC_IN15	

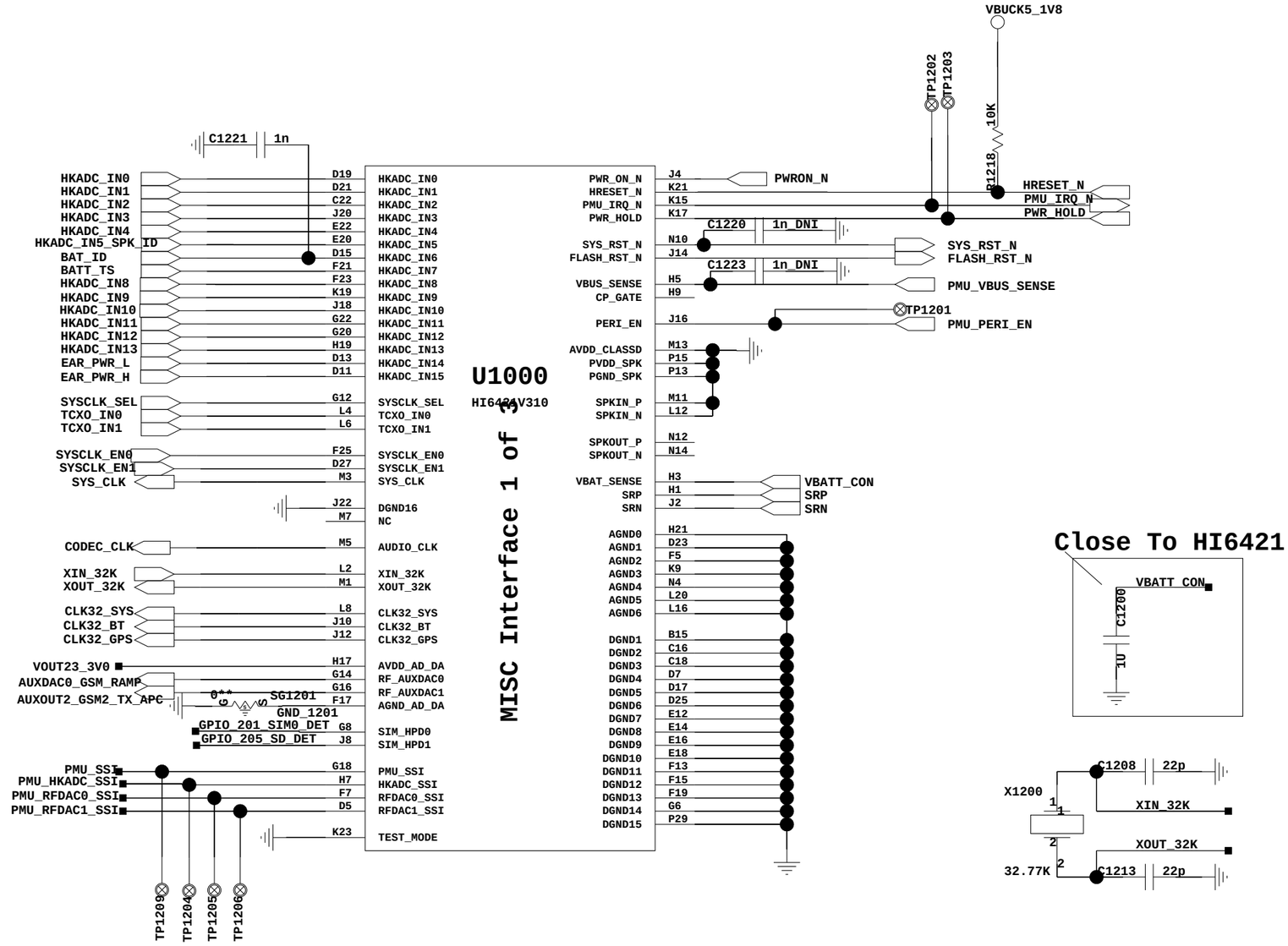

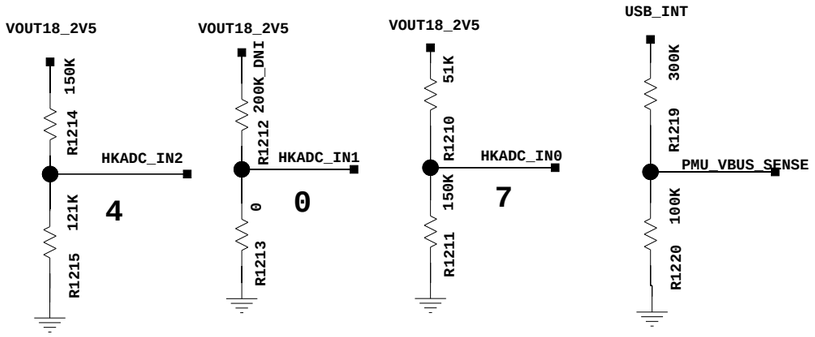

CL VB	0x407	6402 ES
CL VB	0x408	6402 CS R1210=07091172 R1211=07091176

The type and specification of the components refer to the BOM

					11-12-2014_20:04
				TBD For	20140523
				ECA NO	DATE
DESIGNED	yuanhailin/00265042	Grace_CL		03022NKM_SCHZH	
REVIEWED	wangweijie/00303684				
		VER	PART_NUMBER	SHEET 12 OF 60	
		B	03011DVT	HUAWEI TECH CO.,LTD.	

13. eMMC AND LpDDR3

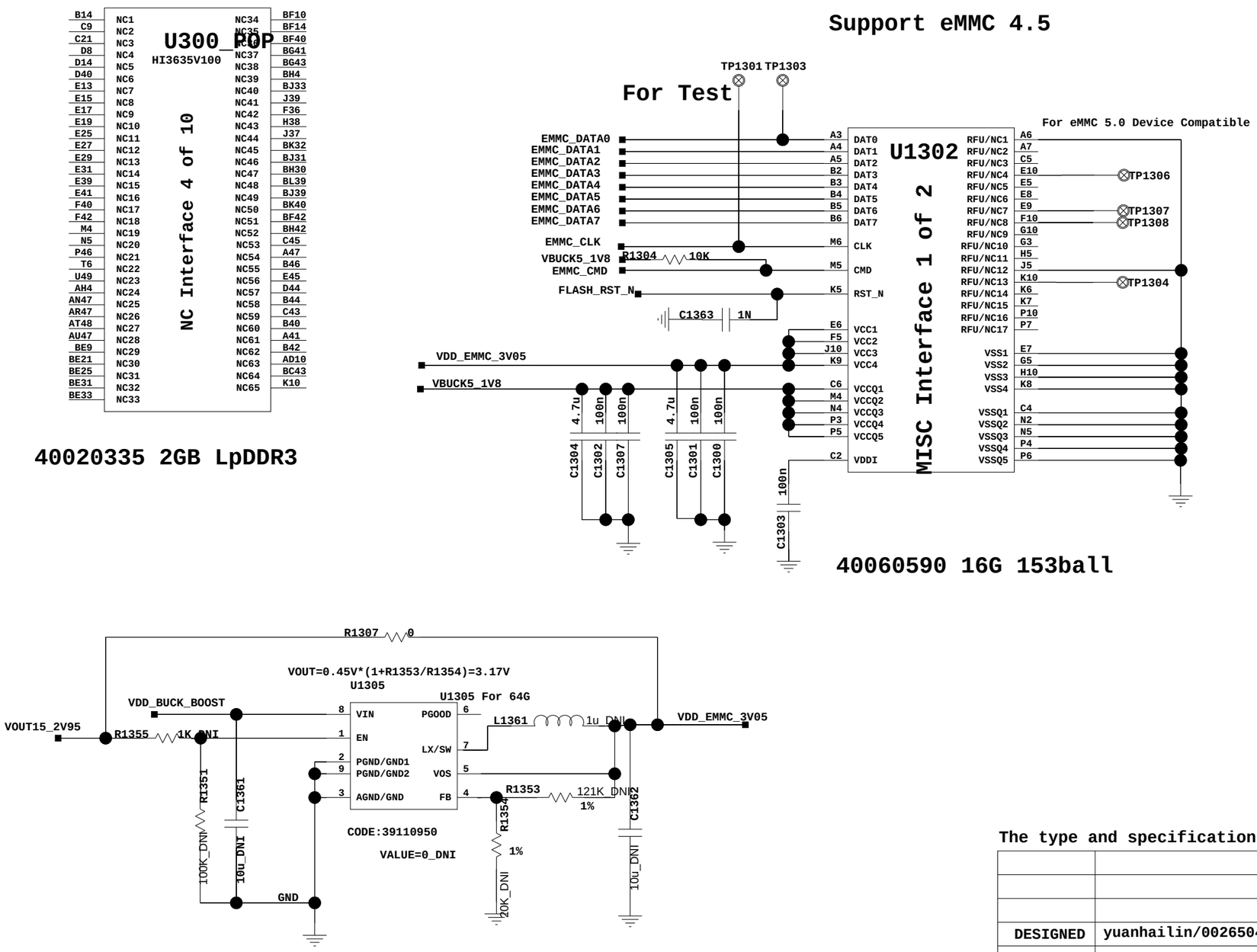

The type and specification of the components refer to the BOM

					21-01-2015_15:51
				TBD For	20140523
				ECA NO	DATE
DESIGNED	yuanhailin/00265042	Grace_CL		03022NKM_SCHZH	
REVIEWED	wangweijie/00303684				
		VER	PART_NUMBER	SHEET 13 OF 60	
		B	03011DVT	HUAWEI TECH CO.,LTD.	

14. Battery & Fuel guage

Battery Connector

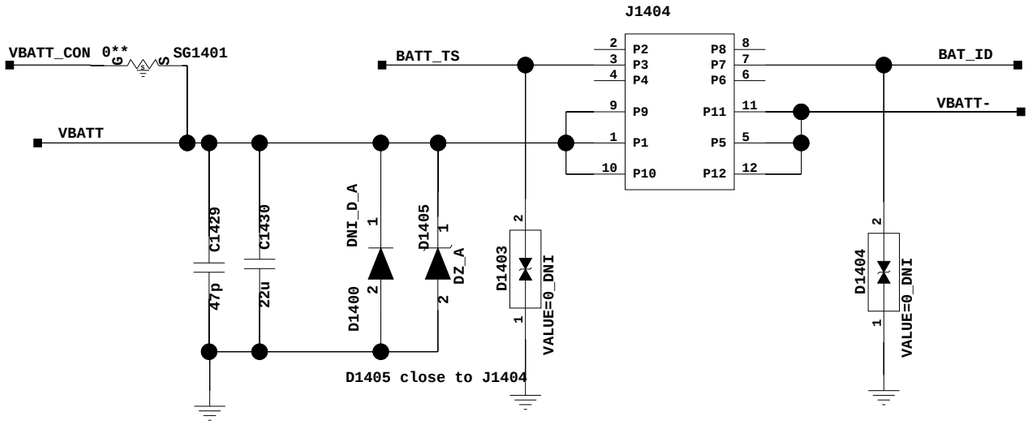

CAD NOTE:RF filter components layout close to PMU(U1000)

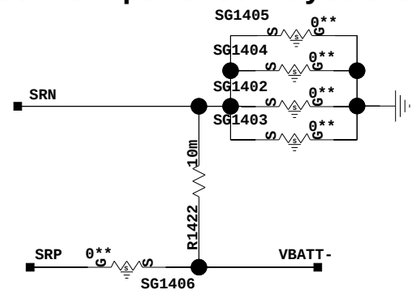

CAD note: differential trace

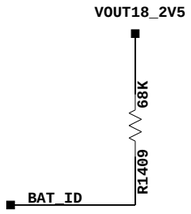

Battery ID

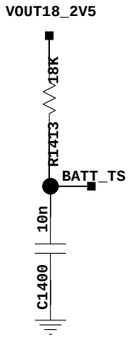

Battery Temperature

کانال ما در تلگرام

@JahanIC

The type and specification of the components refer to the BOM

				NA	20140523
				ECA NO	DATE
DESIGNED	yuanhailin/00265042	Grace_CL		03022AQQ_SCHZH	
REVIEWED	wangweijie/00303684				
		VER	PART_NUMBER	SHEET 14 OF 60	
		B	03022AQQ	HUAWEI TECH CO.,LTD.	

15. Charge Management

USB/MHL/UART SWITCH

I2C address=0100101(0x25)

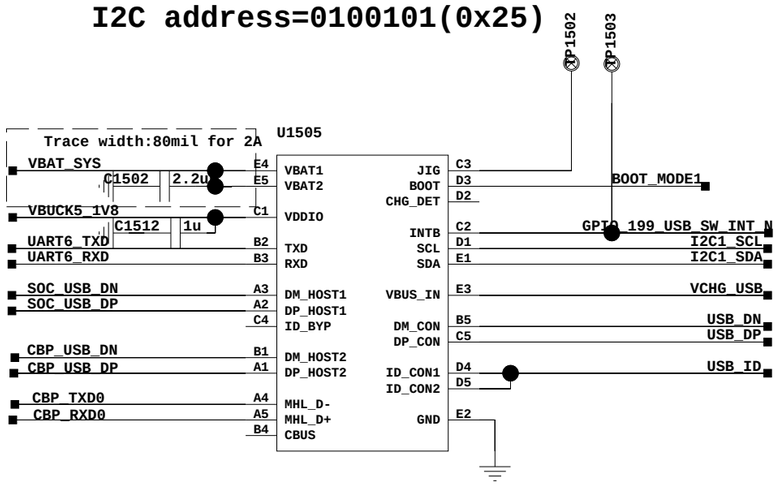

Charger IC

I2C address=1101011b(0x6B)

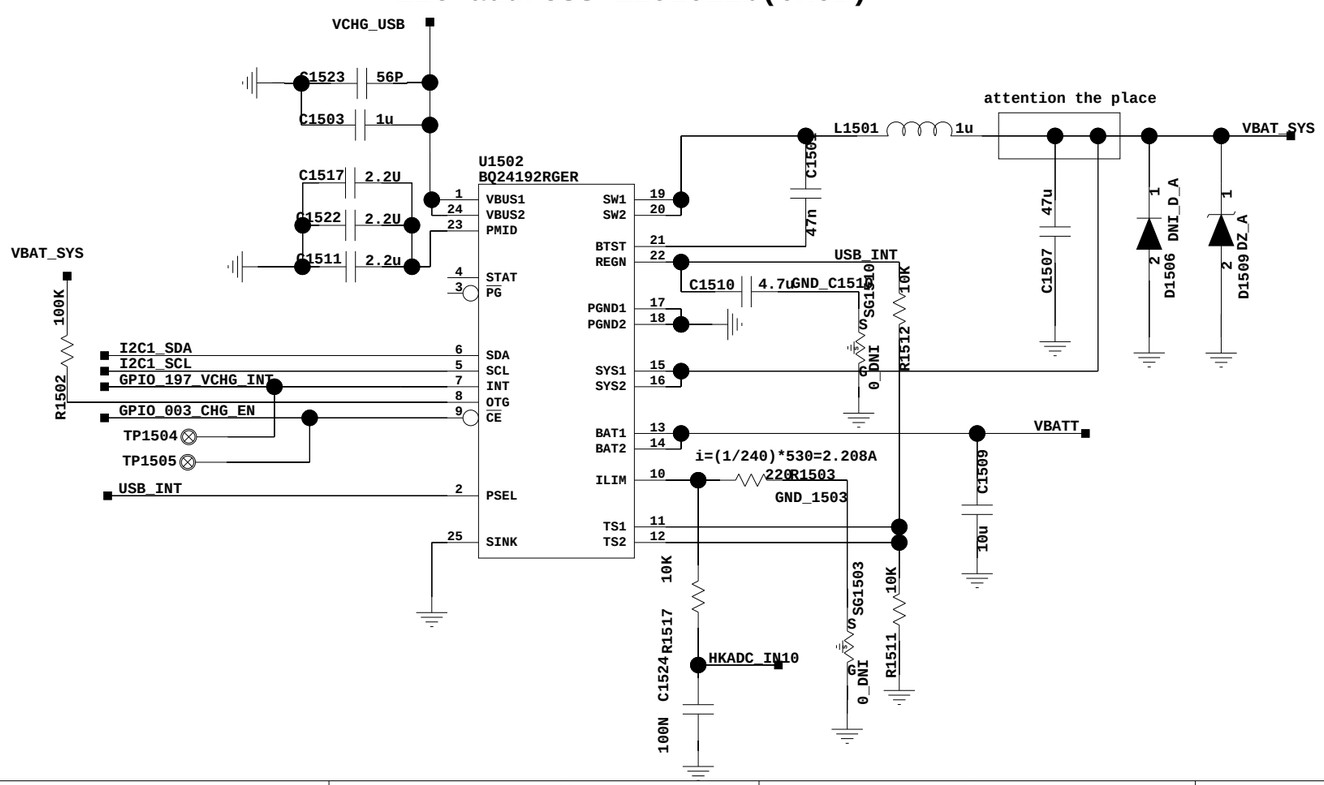

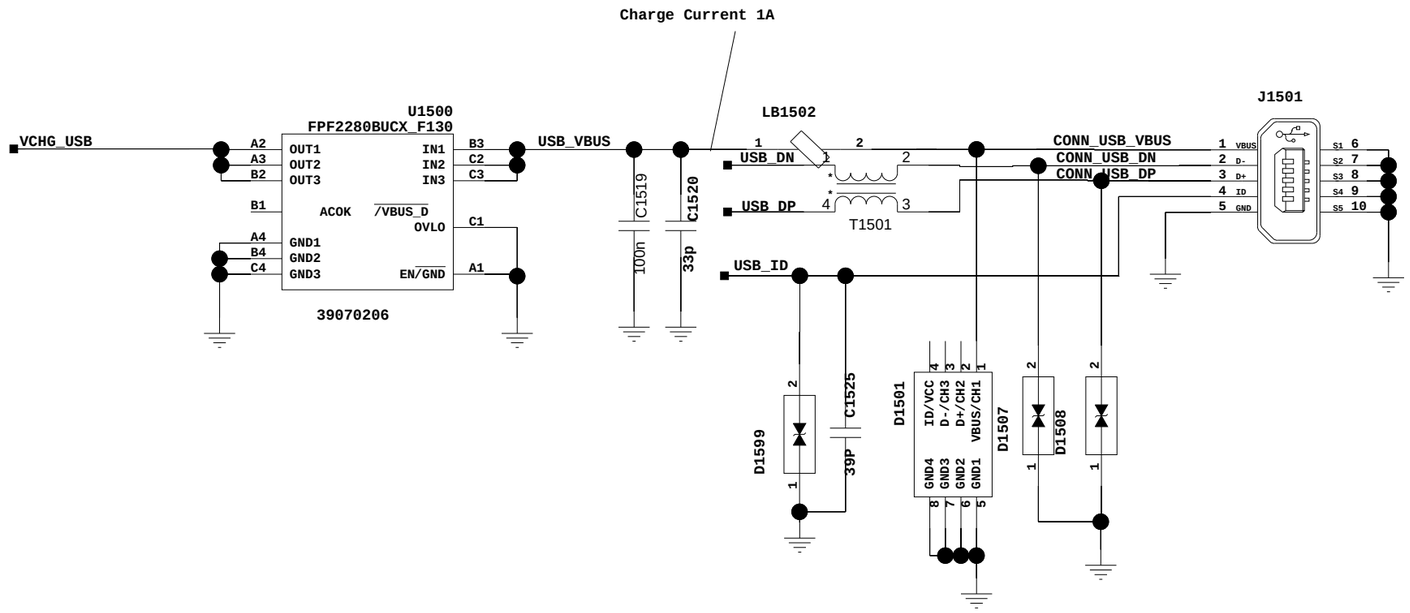

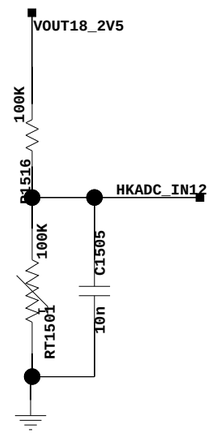

The type and specification of the components refer to the BOM

					24-01-2015_12:53
					20140523
				ECA NO	DATE
DESIGNED	yuanhailin/00265042	Grace_CL			
REVIEWED	wangweijie/00303684				
		VER	PART_NUMBER	SHEET 15 OF 60	
		B		HUAWEI TECH CO.,LTD.	

16. LCD Interface

LCD POS/NEG Voltage Driver

I2C address=0111110(0x3E)

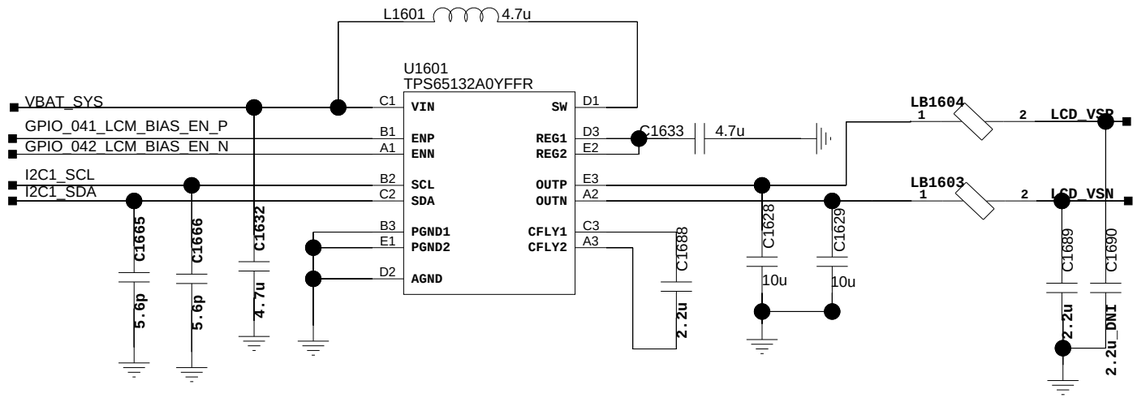

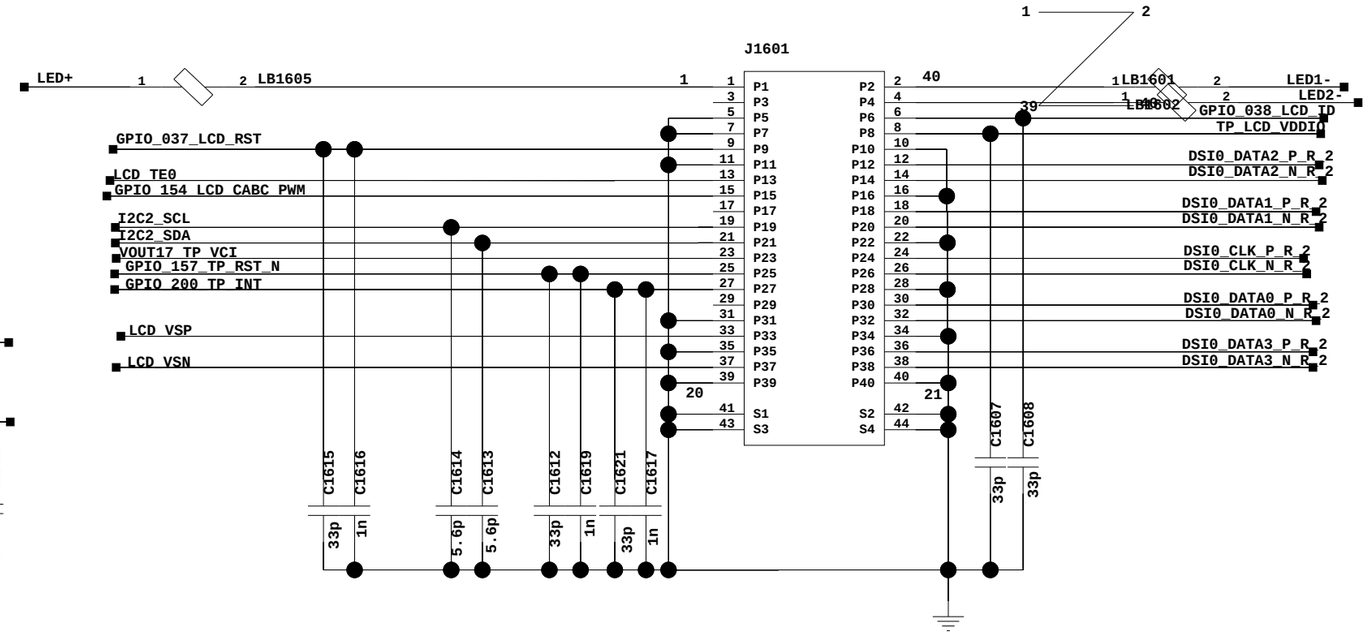

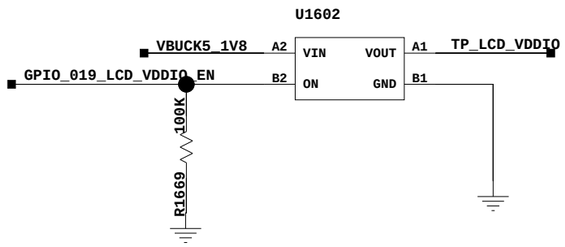

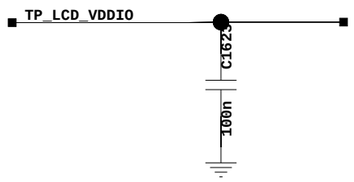

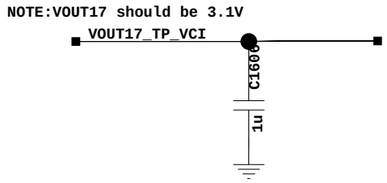

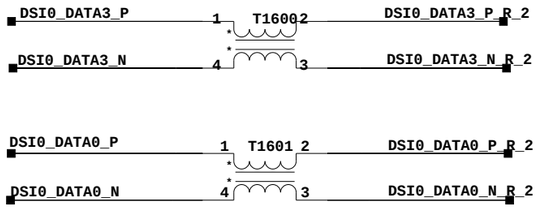

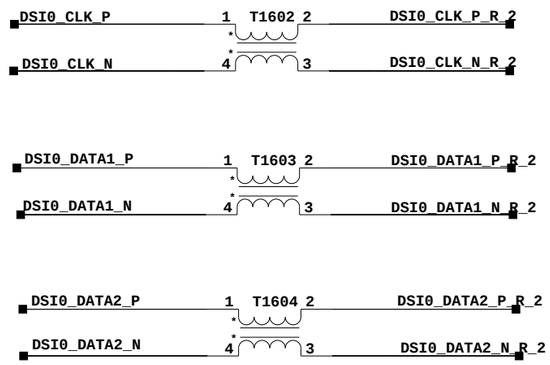

LCD BL DRIVER

CAP tolerance above 50V!!!

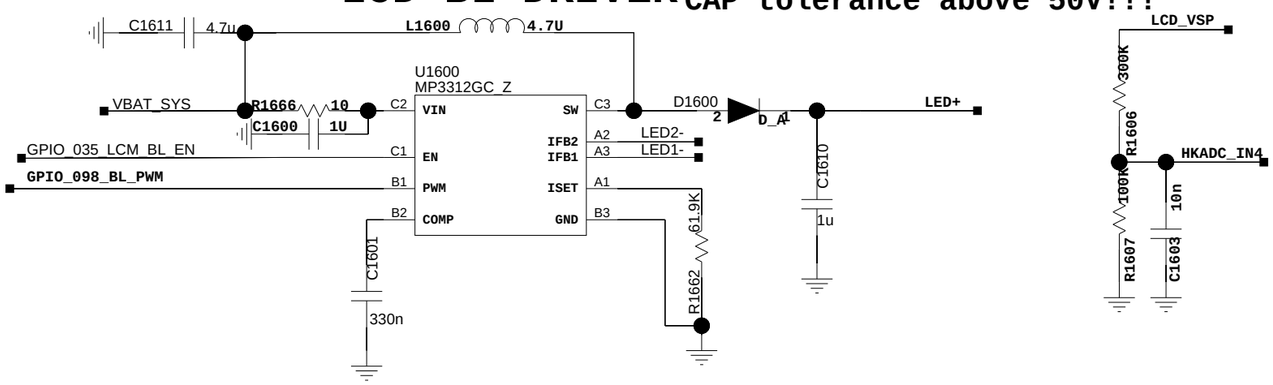

The type and specification of the components refer to the BOM

				NA	20140523
				ECA NO	DATE
DESIGNED	yuanhailin/00265042	Grace_CL		03022AQQ_SCHZH	
REVIEWED	wangweijie/00303684				
		VER	PART_NUMBER	SHEET 16 OF 60	
		B	03022AQQ	HUAWEI TECH CO.,LTD.	

17. Reserved

Flash LED

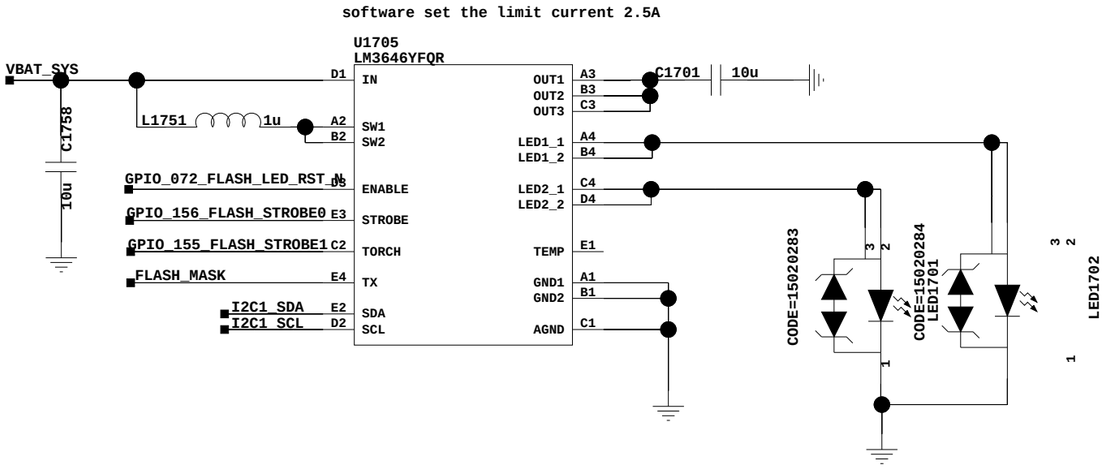

I2C address=(0x63)

کانال ما در تلگرام

@JahanIC

The type and specification of the components refer to the BOM

				NA	20140523
				ECA NO	DATE
DESIGNED	yuanhailin/00265042	Grace_CL		03022AQQ_SCHZH	
REVIEWED	wangweijie/00303684				
		VER	PART_NUMBER	SHEET 17 OF 60	
		B	03022AQQ	HUAWEI TECH CO.,LTD.	

18. Camera

13M MAIN CAMERA

I2C address=

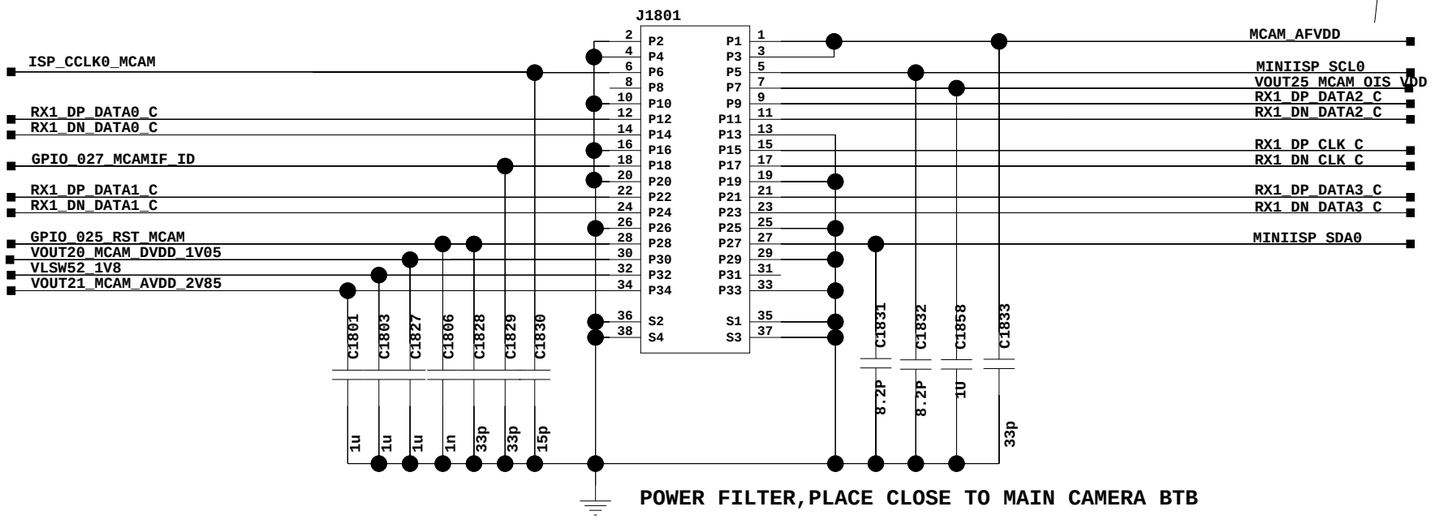

POWER FILTER,PLACE CLOSE TO MAIN CAMERA BTB

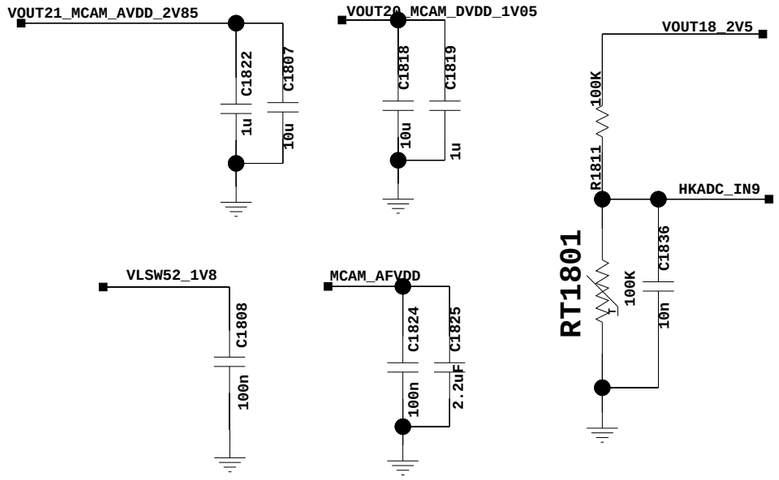

MCAM_AFVDD=0.6*(1+200/51)=2.95v

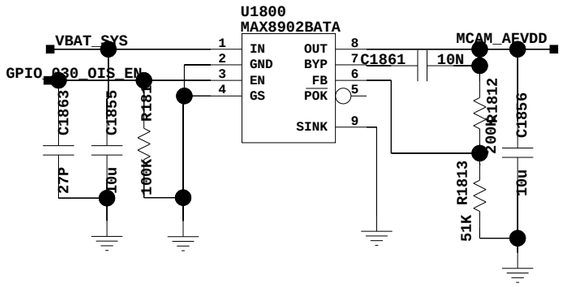

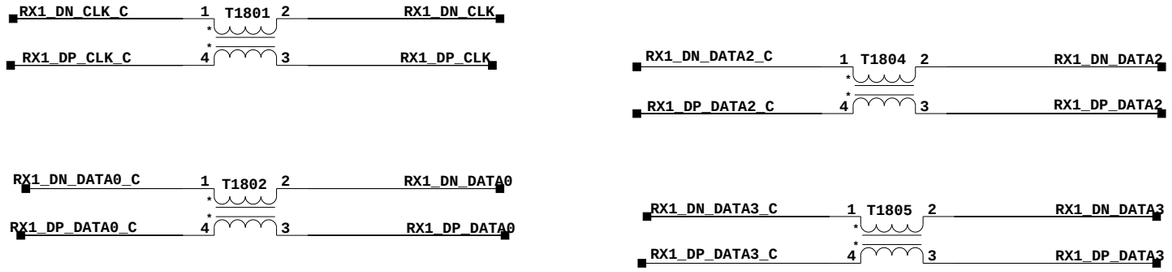

8M SLAVE CAMERA

OV5648:I2C address=

S5K4E1GX:I2C address=

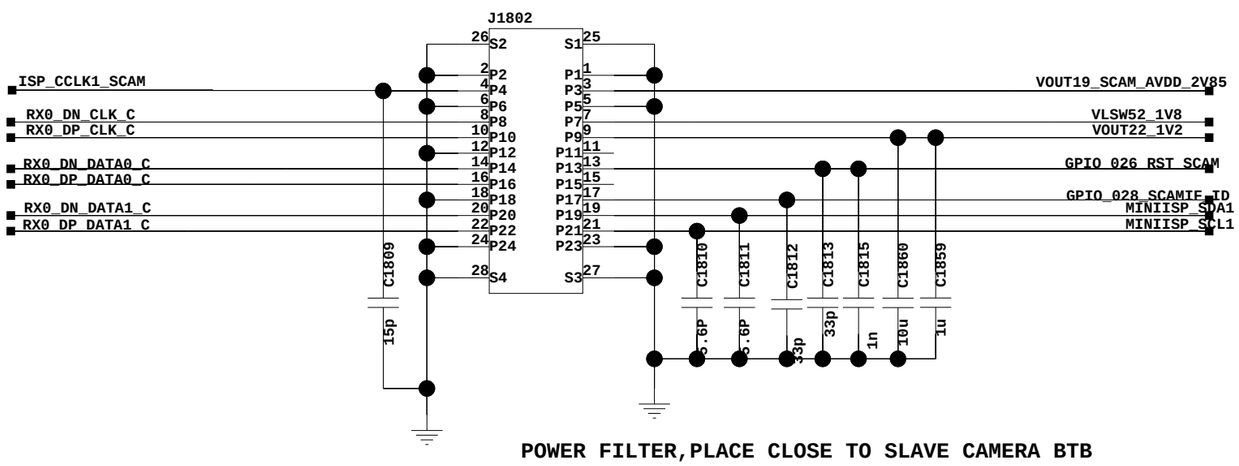

POWER FILTER,PLACE CLOSE TO SLAVE CAMERA BTB

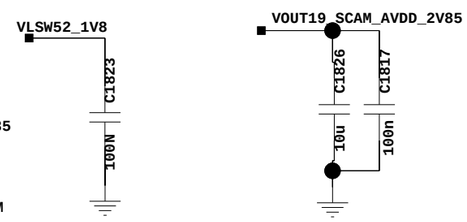

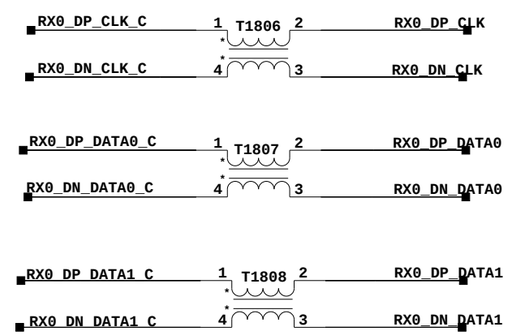

The type and specification of the components refer to the BOM

				NA	20140523
				ECA NO	DATE
DESIGNED	yuanhailin/00265042	Grace_CL			
REVIEWED	wangweijie/00303684				
		VER	PART_NUMBER	SHEET 18 OF 60	
		B		HUAWEI TECH CO.,LTD.	

19. Reserved for ISP

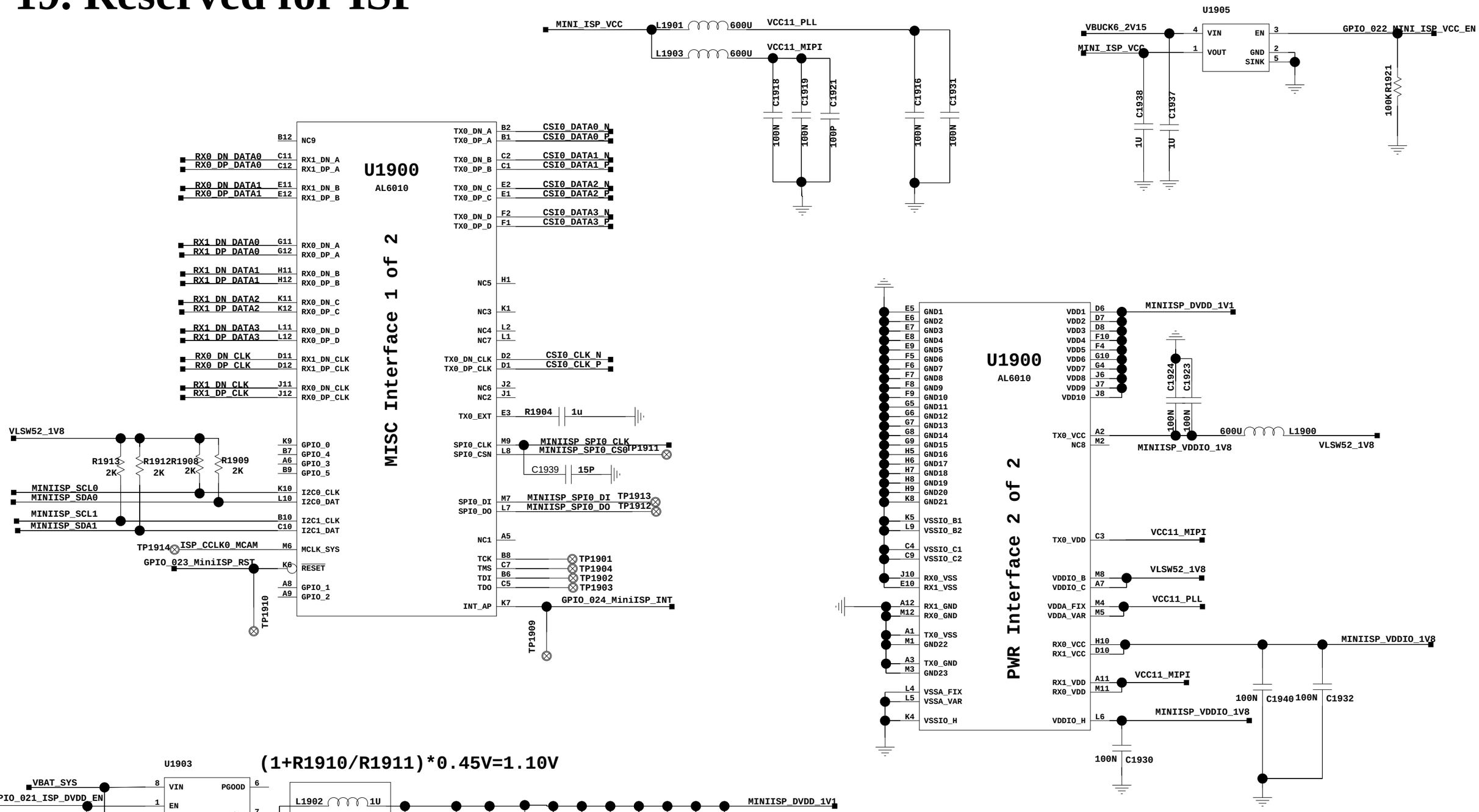

The type and specification of the components refer to the BOM

					24-01-2015_12:56
				NA	20140523
				ECA NO	DATE
DESIGNED	yuanhailin/00265042	Grace_TUL		03022MYN_SCHZH	
REVIEWED	wangweijie/00122033				
		VER	PART_NUMBER	SHEET 19 OF 60	
		A	03022MYN	HUAWEI TECH CO.,LTD.	

20. CODEC HI6402

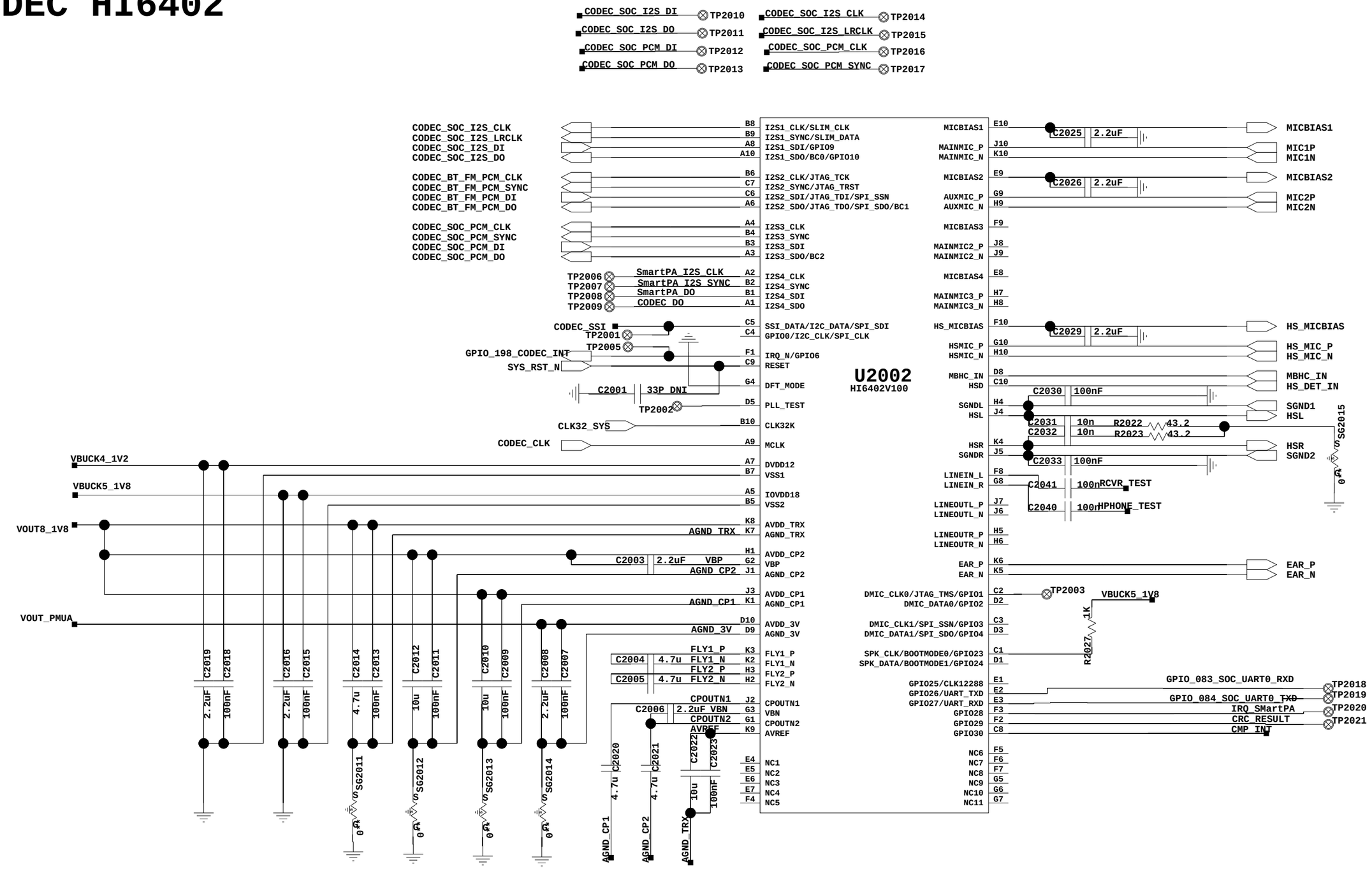

The type and specification of the components refer to the BOM

				NA	
				ECA NO	DATE
DESIGNED	yuanhailin/00265042	Grace_CL		00001234	
REVIEWED	wangweijie/00303684				
		VER	PART_NUMBER	SHEET 20 OF 60	
		B	03030001	HUAWEI TECH CO.,LTD.	

21. MIC/RCV/SPK/VIB

VIB

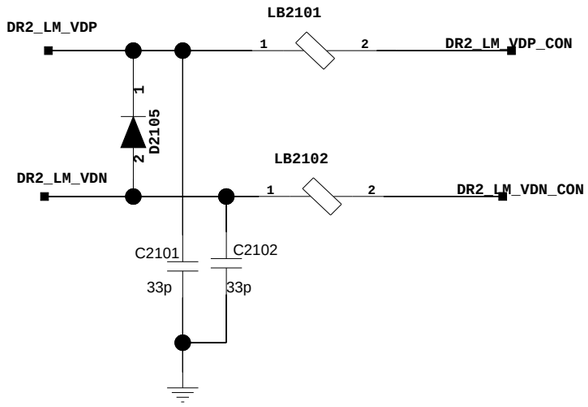

RCV

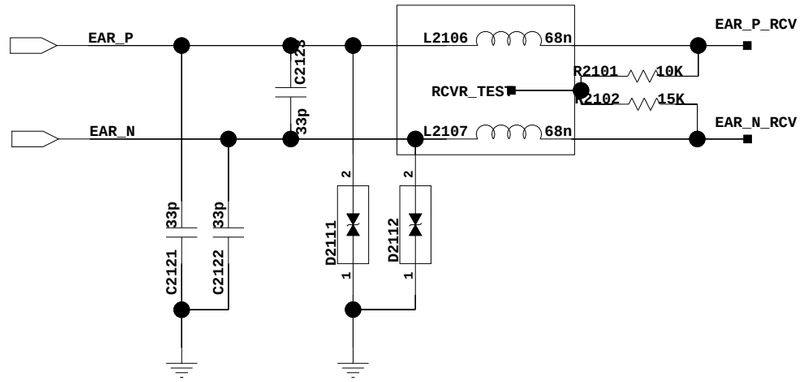

CAD note: MIC need differential trace

Secondary MIC

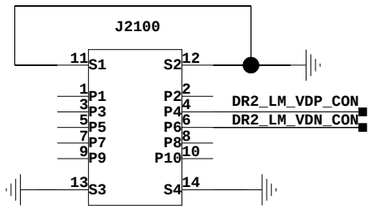

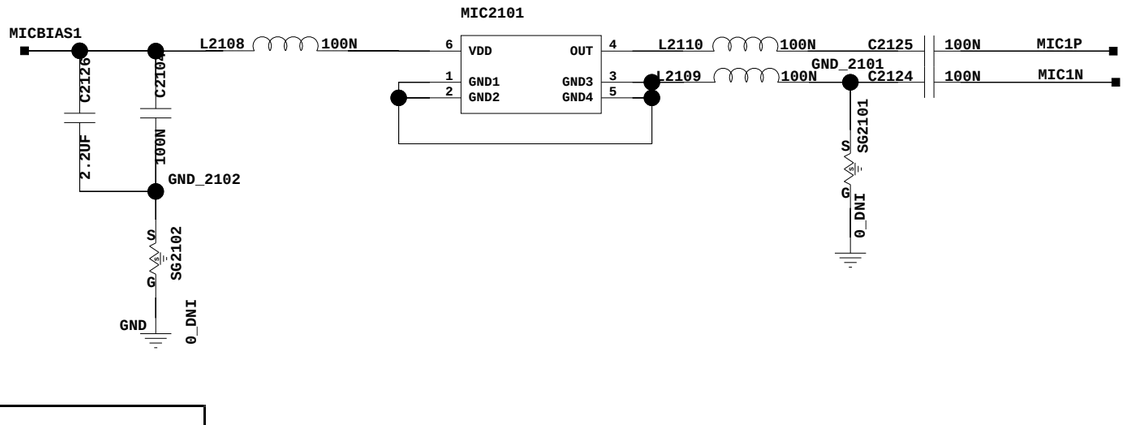

کانال ما در تلگرام

@JahanIC

The type and specification of the components refer to the BOM

				NA	20140523
				ECA NO	DATE
DESIGNED	yuanhailin/00265042	Grace_CL		03022AQQ_SCHZH	
REVIEWED	wangweijie/00303684				
		VER	PART_NUMBER	SHEET 21 OF 60	
		B	03022AQQ	HUAWEI TECH CO.,LTD.	

22. Headphone

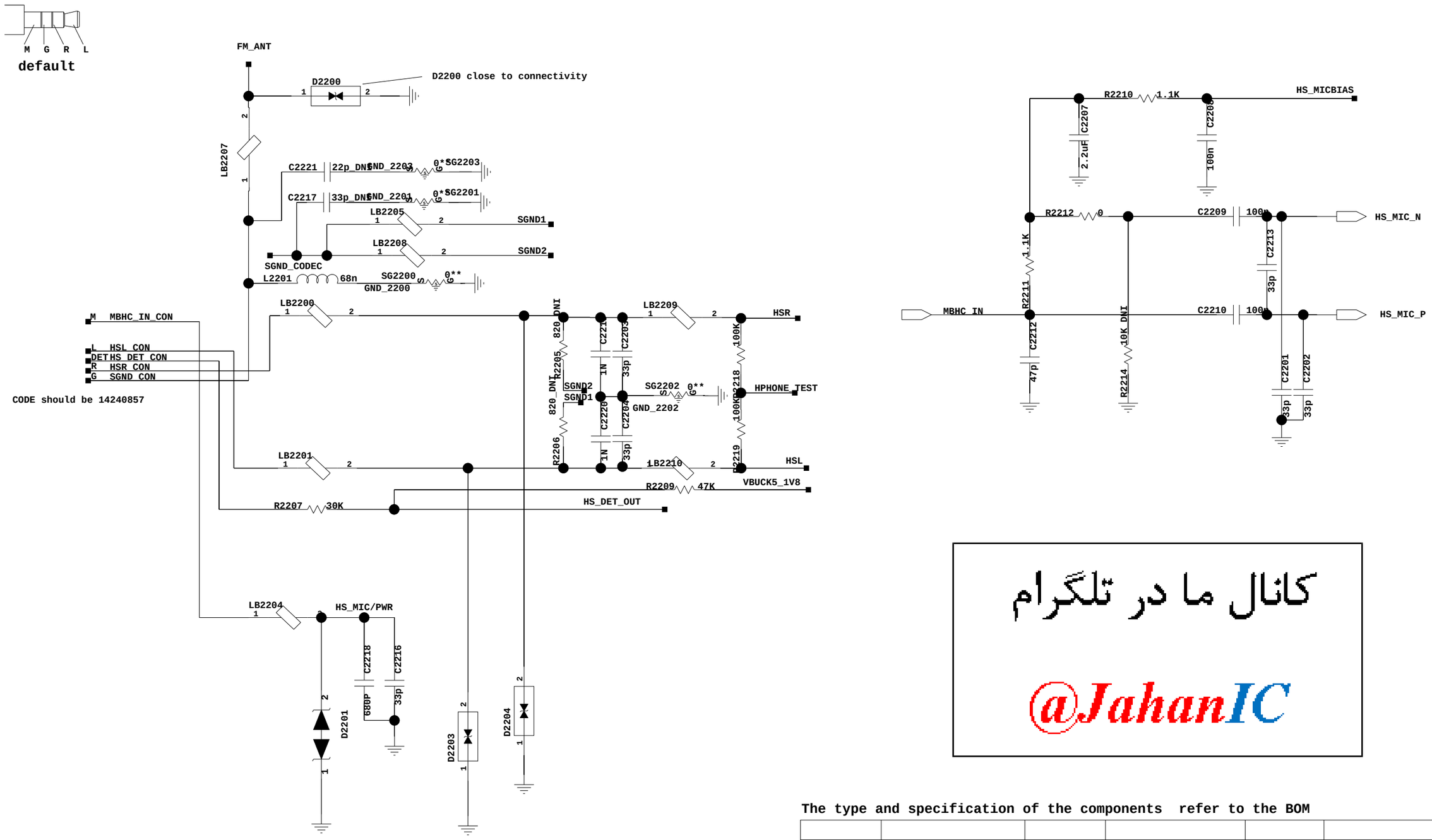

کانال ما در تلگرام

@JahanIC

The type and specification of the components refer to the BOM

				NA	20140523
				ECA NO	DATE
DESIGNED	yuanhailin/00265042	Grace_CL		00001234	
REVIEWED	wangweijie/00303684				
		VER	PART_NUMBER	SHEET 22 OF 60	
		B	03022AQQ	HUAWEI TECH CO.,LTD.	

23. Audio

IN1/2	NO1/2	NC1/2
L	OFF	ON
H	ON	OFF

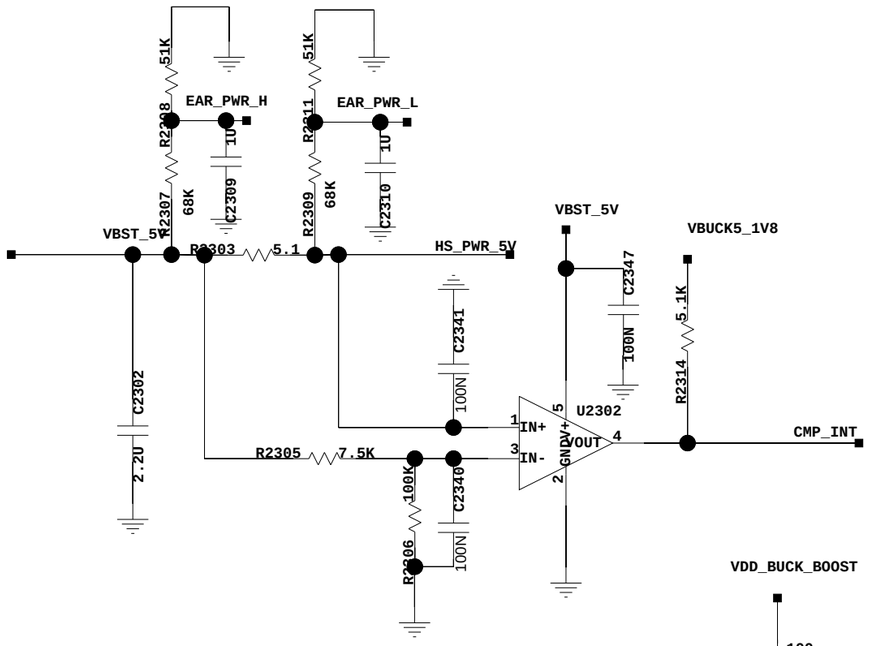

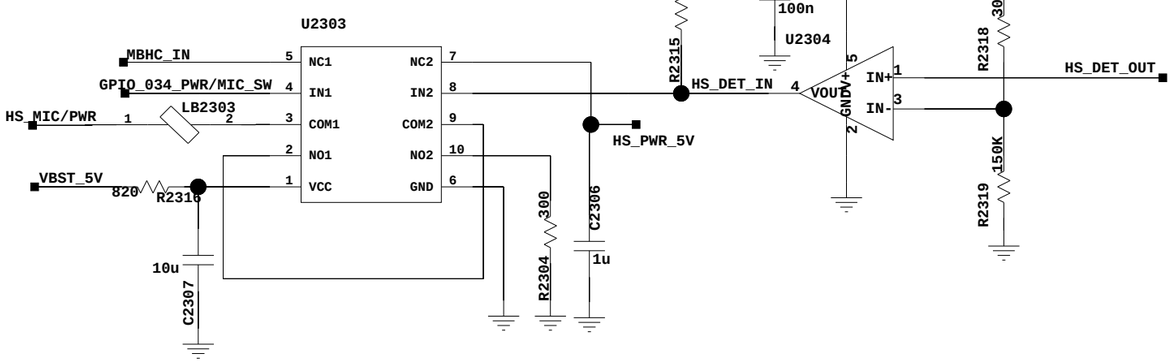

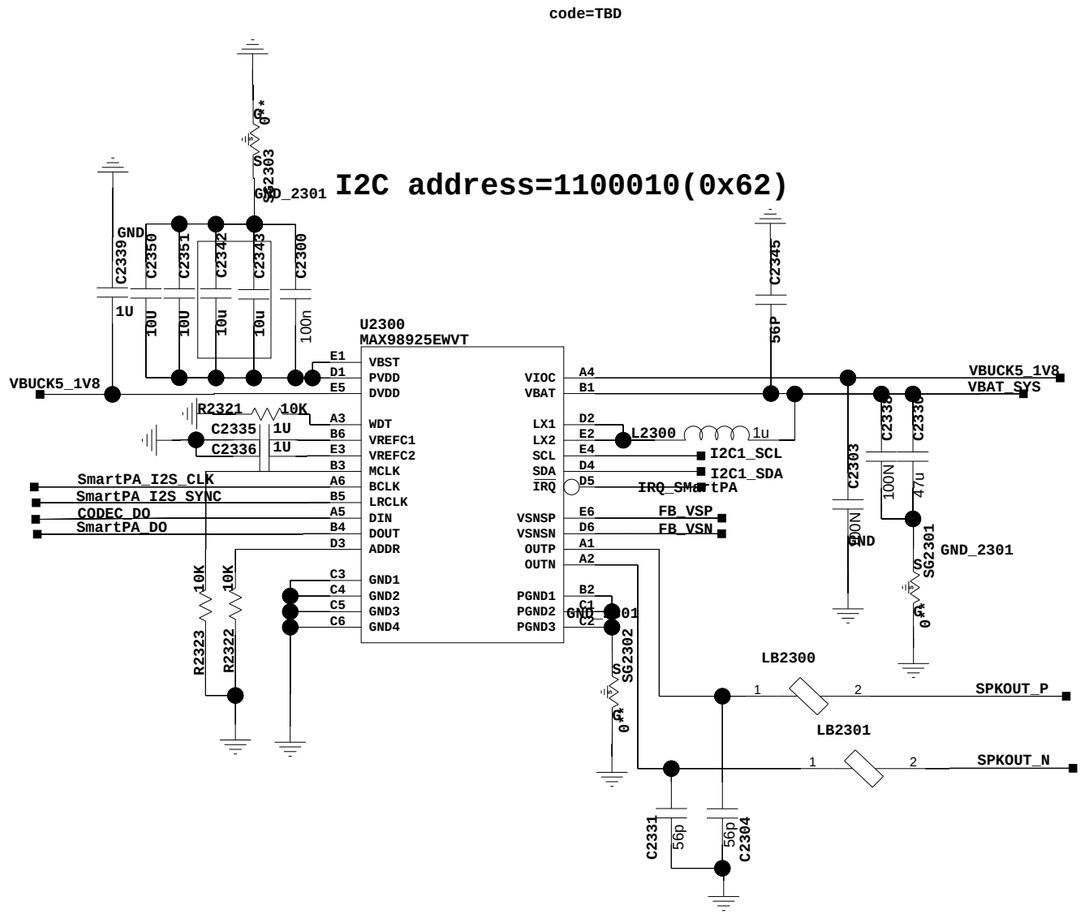

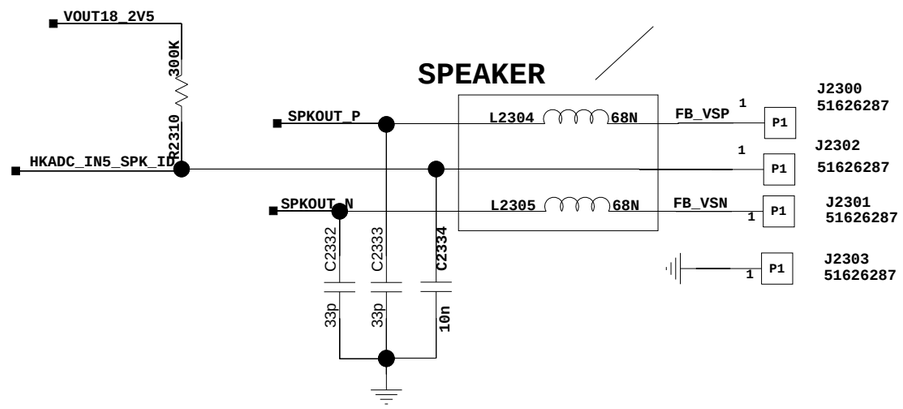

The type and specification of the components refer to the BOM

					07-01-2015_18:25
					20140523
				ECA NO	DATE
DESIGNED	yuanhailin/00265042	Grace_CL			
REVIEWED	wangweijie/00303684				
		VER	PART_NUMBER	SHEET 23 OF 60	
		B		HUAWEI TECH CO.,LTD.	

24. Healthy Headphone

کانال ما در تلگرام

@JahanIC

The type and specification of the components refer to the BOM

					04-11-2014_11:52
					20140523
				ECA NO	DATE
DESIGNED	yuanhailin/00265042	Grace_CL			
REVIEWED	wangweijie/00303684				
		VER	PART_NUMBER	SHEET 24 OF 60	
		B		HUAWEI TECH CO.,LTD.	

25. X-Sensor

کانال ما در تلگرام

@JahanIC

Accelerometer and Gyroscope 6-AXIS SENSOR

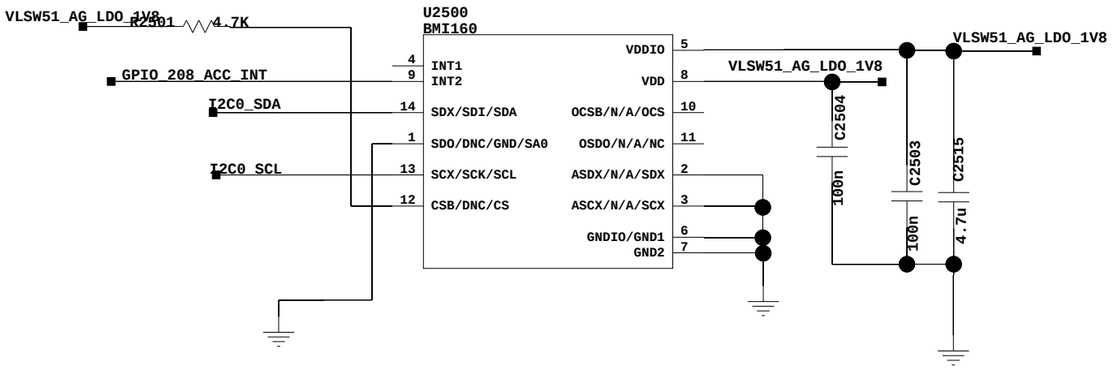

SDO=1 ADDRESS=0X6B(ST)/0X69(BOSCH)
SDO=0 ADDRESS=0X6A(ST)/0X68(BOSCH)

Hall

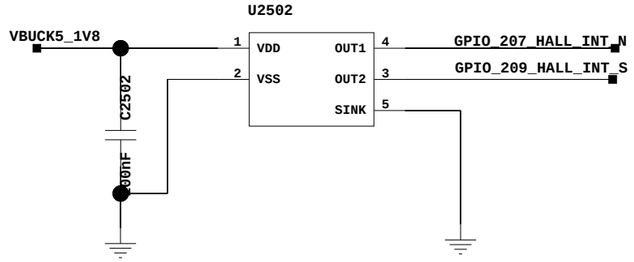

Compass

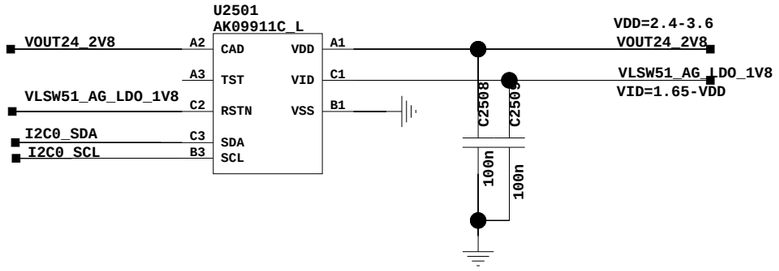

The type and specification of the components refer to the BOM

					2012-09-20
				NA	20140523
				ECA NO	DATE
DESIGNED	yuanhailin/00265042				
		Grace_CL		00001234	
REVIEWED	wangweijie/00303684				
		VER	PART_NUMBER	SHEET 25 OF 60	
		B	03022AQQ	HUAWEI TECH CO.,LTD.	

26. X-Sensor+IrDA

Hot Area TMP sensor

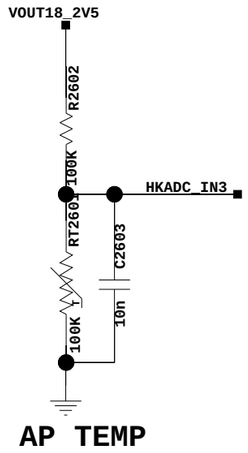

The type and specification of the components refer to the BOM

				NA	20140523
				ECA NO	DATE
DESIGNED	yuanhailin/00265042	Grace_CL		00001234	
REVIEWED	wangweijie/00303684				
		VER	PART_NUMBER	SHEET 26 OF 60	
		B	03022AQQ	HUAWEI TECH CO.,LTD.	

27. External DC/DC

کانال ما در تلگرام

@JahanIC

The type and specification of the components refer to the BOM

				NA	20140523
				ECA NO	DATE
DESIGNED	yuanhailin/00265042	Grace_CL		03022AQQ_SCHZH	
REVIEWED	wangweijie/00303684				
		VER	PART_NUMBER	SHEET 27 OF 60	
		B	03022AQQ	HUAWEI TECH CO.,LTD.	

28. SIM/uSD Card

SIM Card 1

DNI FOR V2

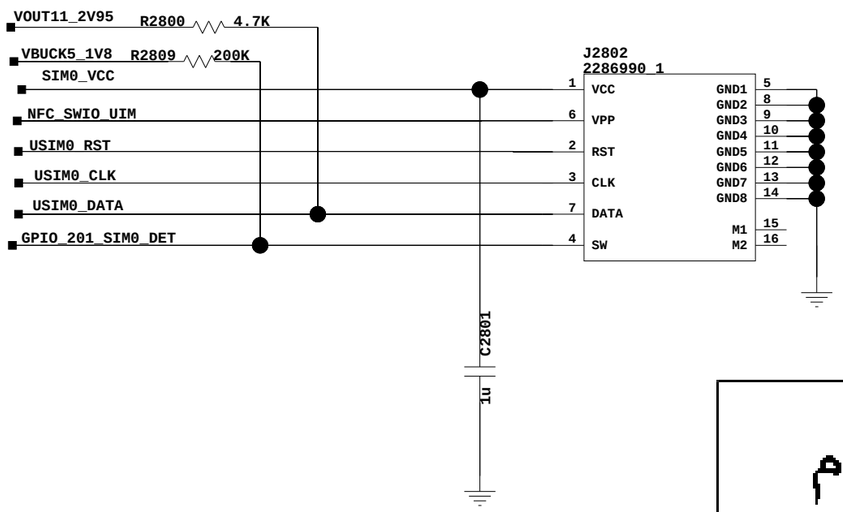

GSM SIM2/Micro SD CARD

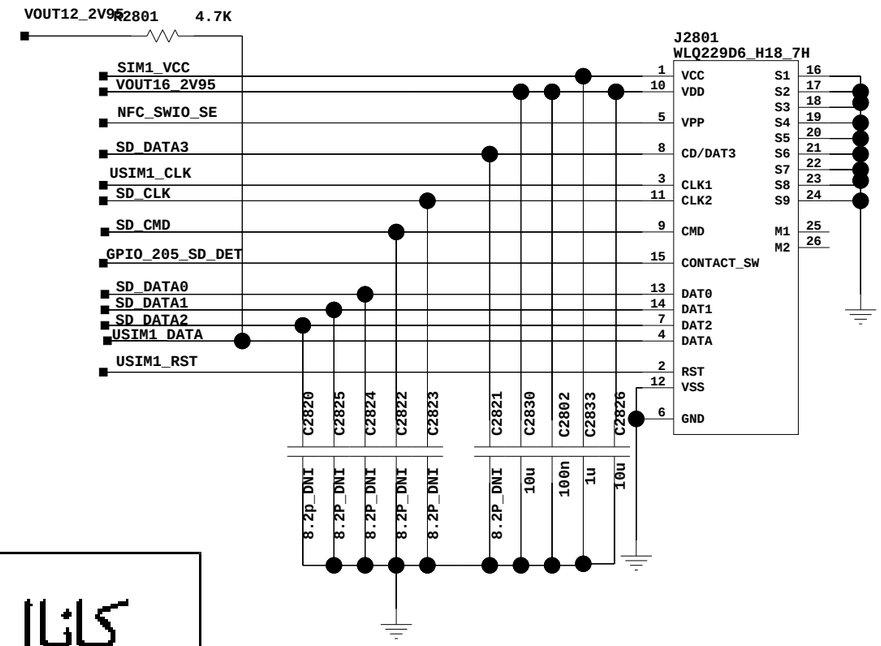

كانال ما در تلگرام

@JahanIC

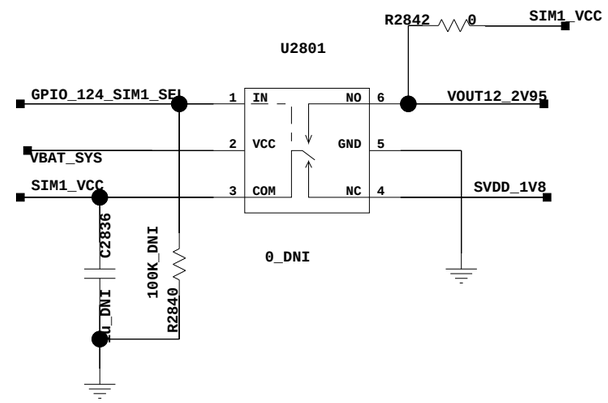

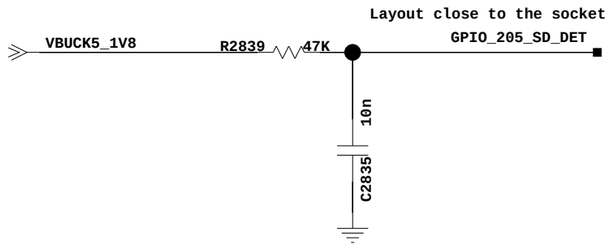

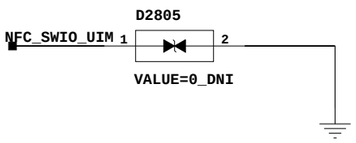

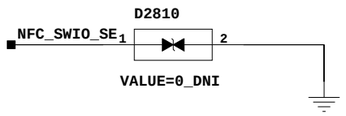

GPIO_202 \ SIM1_VCC	SE_VCC	VOUT12_2V95
H		○
L	○	

The type and specification of the components refer to the BOM

				NA	20140523
				ECA NO	DATE
DESIGNED	yuanhailin/00265042	Grace_CL		03022AQQ_SCHZH	
REVIEWED	wangweijie/00303684				
		VER	PART_NUMBER	SHEET 28 OF 60	
		B	03022AQQ	HUAWEI TECH CO.,LTD.	

29. FPC Interface

PROXIMITY&AMBIENT LIGHT

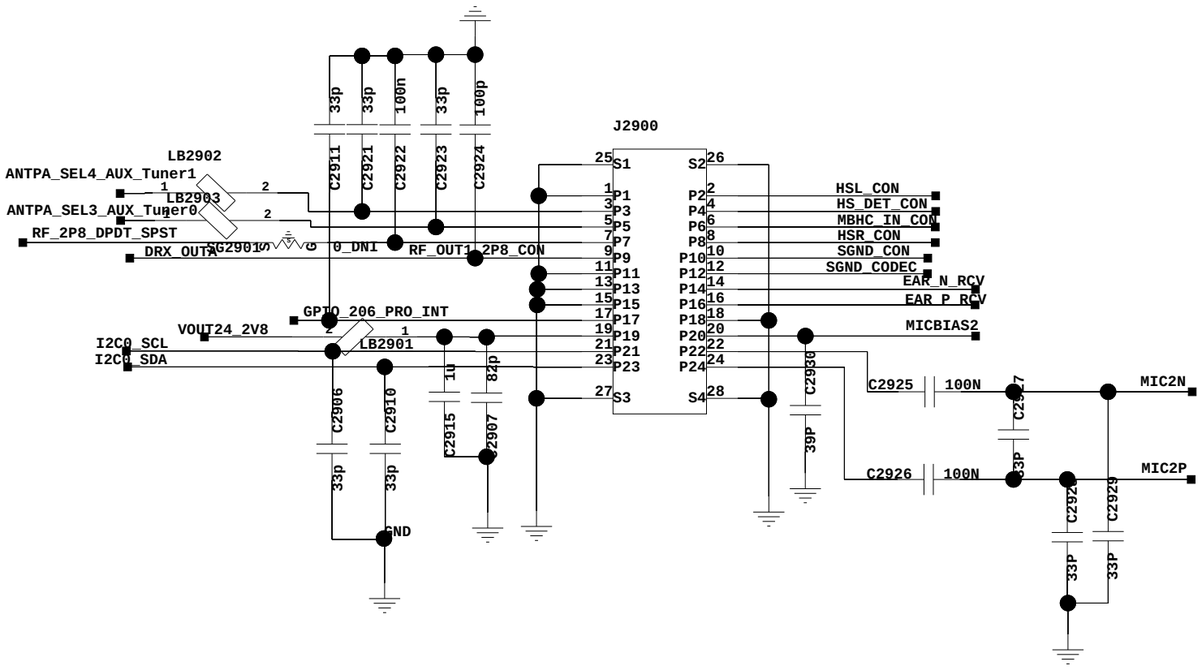

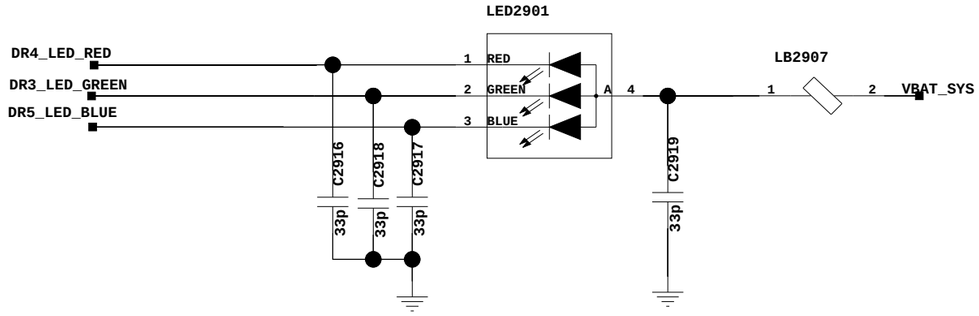

PWRON KEY&KEY UP/DOWN BTB

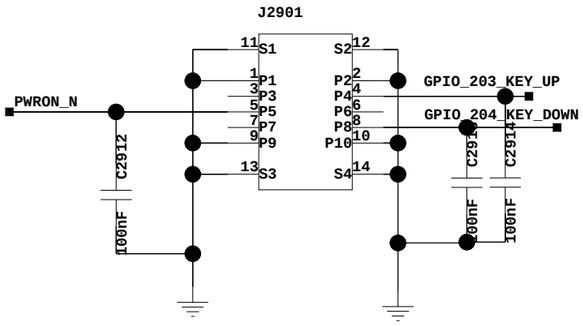

The type and specification of the components refer to the BOM

				NA	20140523
				ECA NO	DATE
DESIGNED	yuanhailin/00265042	Grace_CL		03022AQQ_SCHZH	
REVIEWED	wangweijie/00303684				
		VER	PART_NUMBER	SHEET 29 OF 60	
		B	03022AQQ	HUAWEI TECH CO.,LTD.	

30. Test Point/Shielding

AP JTAG

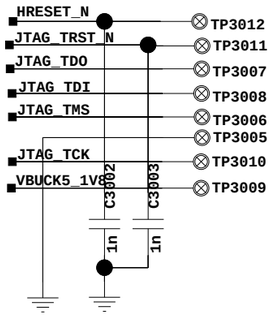

Sim Card 1

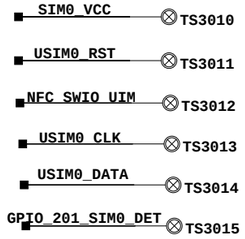

Sim Card 2/SD Card

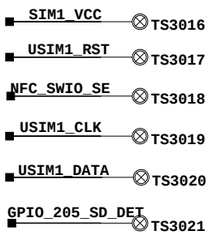

HOLE

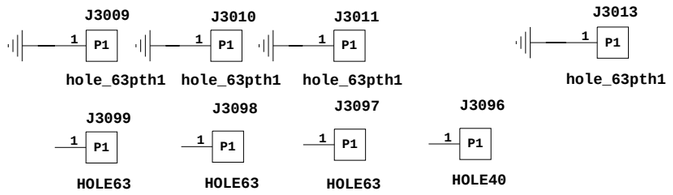

Mark Point

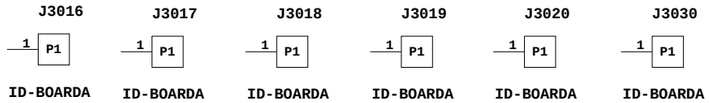

SPK

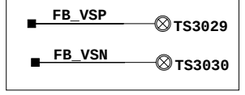

Vibrator

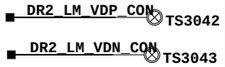

Battery

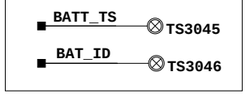

spring

TEST POINT for CT and BT

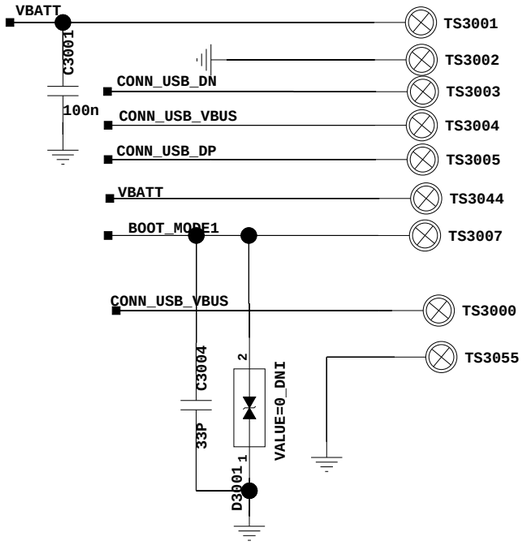

RCV

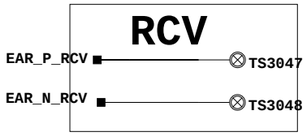

Shielding

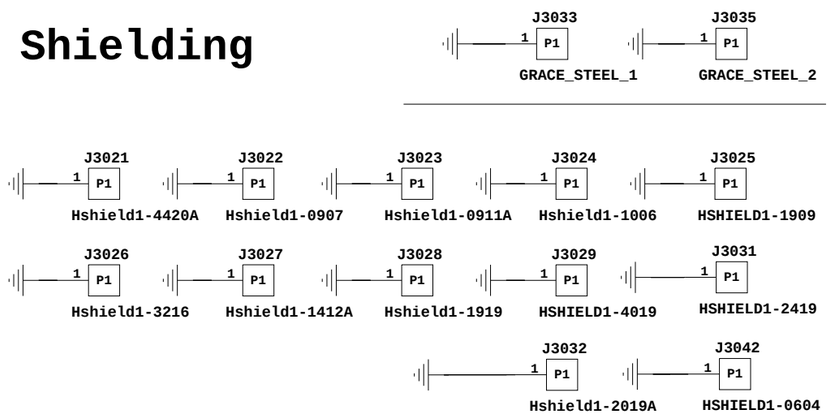

MIC

Debug UART

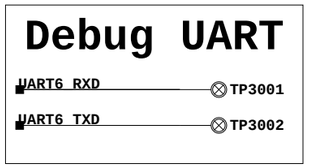

Side Key

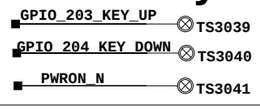

USB

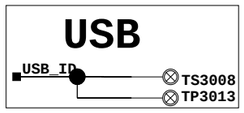

LCD Backlight

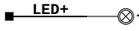

Headphone

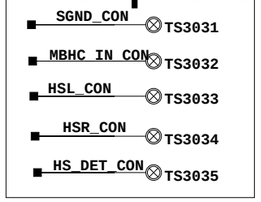

GND

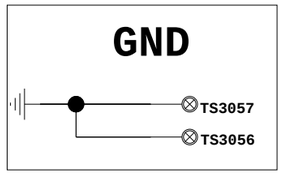

The type and specification of the components refer to the BOM

				NA	20140523
				ECA NO	DATE
DESIGNED	yuanhailin/00265042	Grace_CL		03022AQQ_SCHZH	
REVIEWED	wangweijie/00303684				
		VER	PART_NUMBER	SHEET 30 OF 60	
		B	03022AQQ	HUAWEI TECH CO.,LTD.	

31.Tunner IC

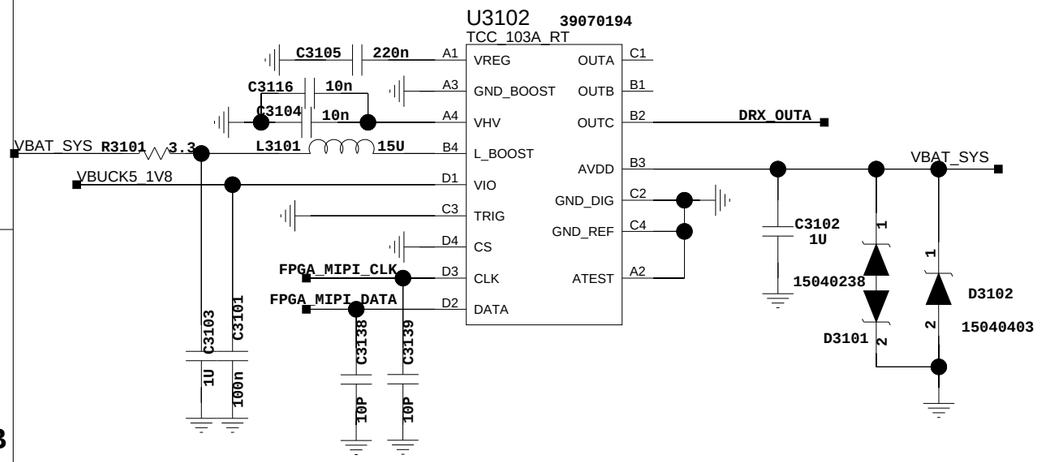

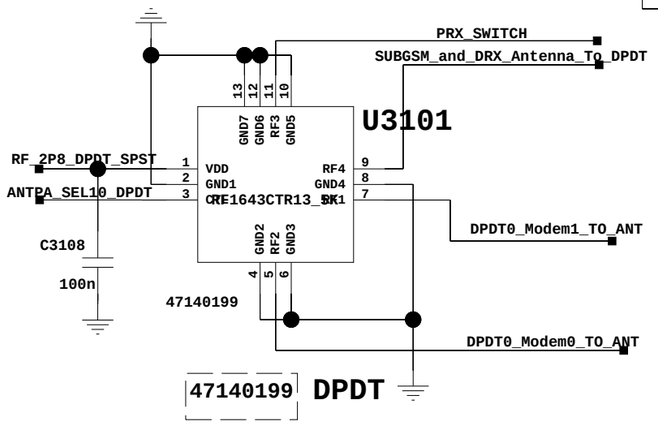

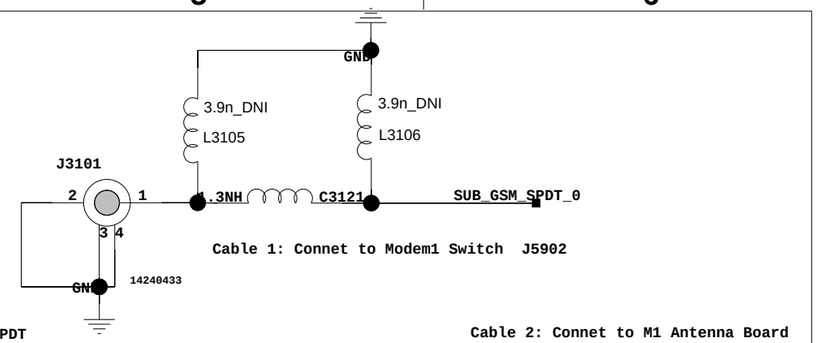

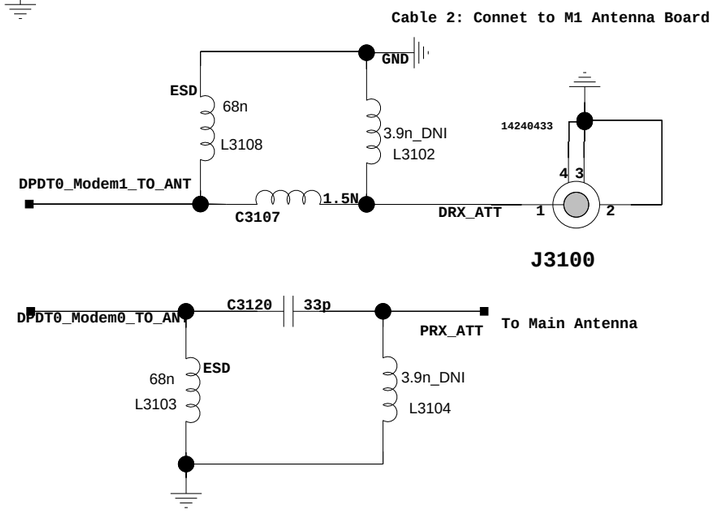

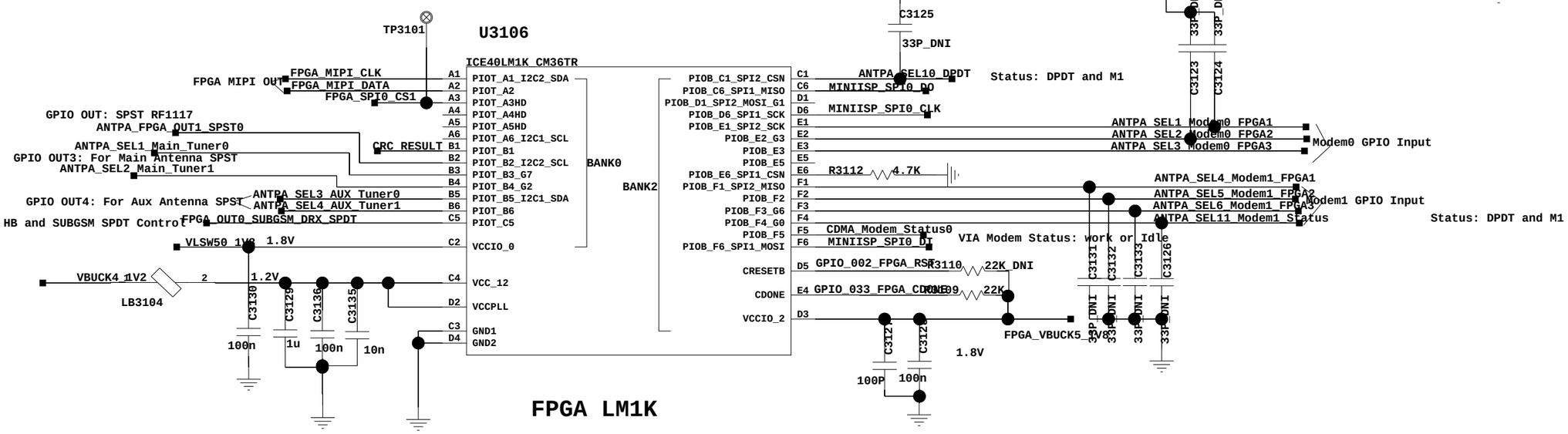

1.8V and 1.2V must always on after Power ON

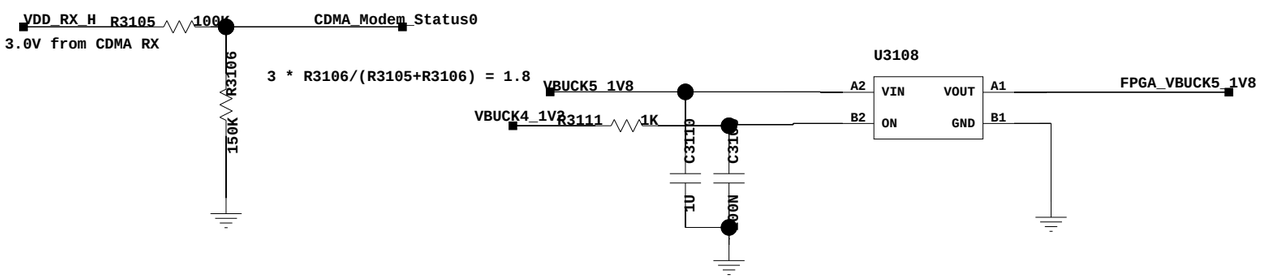

For Modem1/LTE DRX Switch

The type and specification of the components refer to the BOM

					24-01-2015_13:03
					20140523
				ECA NO	DATE
DESIGNED	yuanhailin/00265042	Grace_CL			
REVIEWED	wangweijie/00303684				
		VER	PART_NUMBER	SHEET 31 OF 60	
		B		HUAWEI TECH CO.,LTD.	

32.RF PMU(CH0)/External Regulator£¨CH1£©

CH0

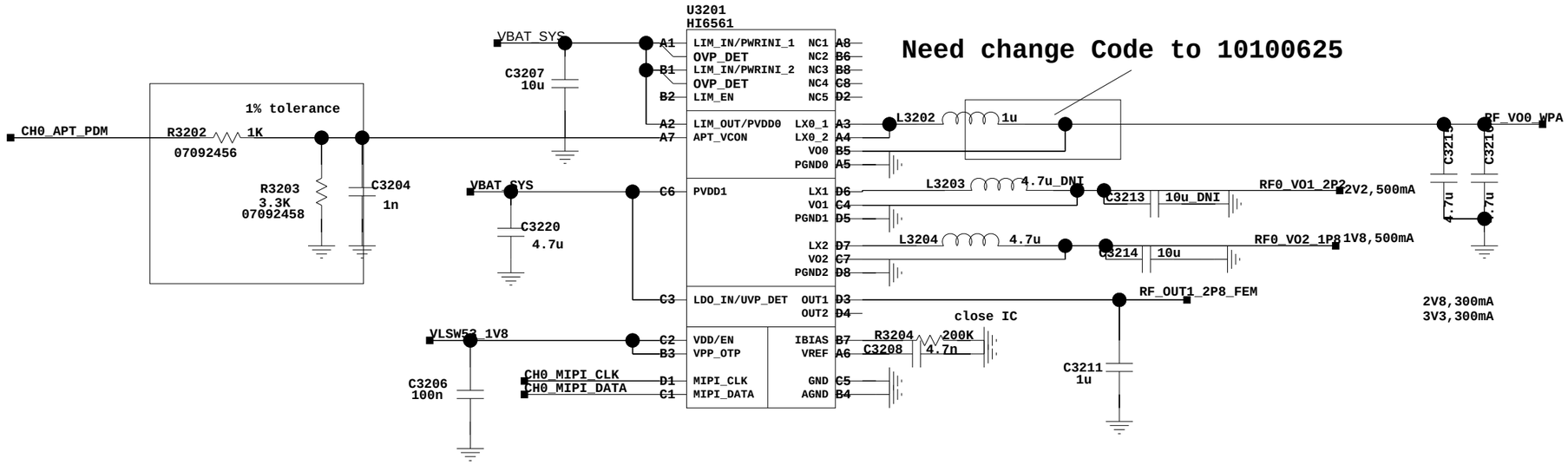

CH1

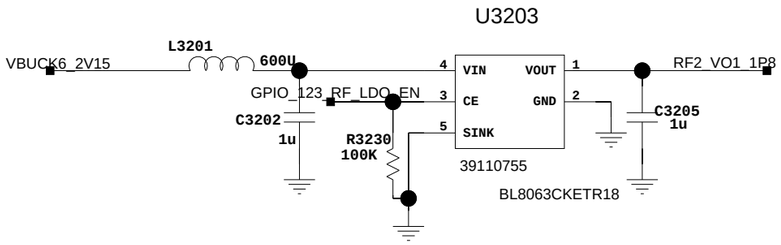

2.8V

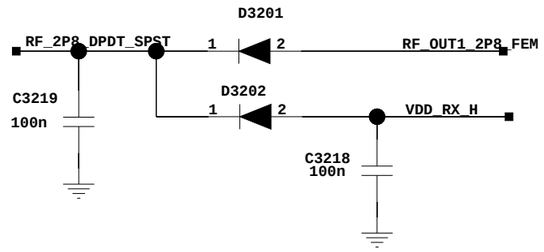

Power Supply For Antenna Switch and CL Switch

کانال ما در تلگرام

@JahanIC

The type and specification of the components refer to the BOM

					07-01-2015_15:10
				NA	20140523
				ECA NO	DATE
DESIGNED	yuanhailin/00265042	Grace_CL		00001234	
REVIEWED	wangweijie/00303684				
		VER	PART_NUMBER	SHEET 32 OF 60	
		B		HUAWEI TECH CO.,LTD.	

33.RF Transceiver0(CH0)/TCXO0

2G: G2/3/5/8 FDL:B1/B3
W: B1/2/5/8 TDL:B41

	LB1	LB2	LB3	HB1	HB2	HB3	UHB1	UHB2
TX	B5/B8	GSM_LB		B3	GSM_HB	B1/B2		B41
RX_A	GB8	B5/GB5		B3	B1			B41
RX_B				B2/B2/GB2			B1	B41

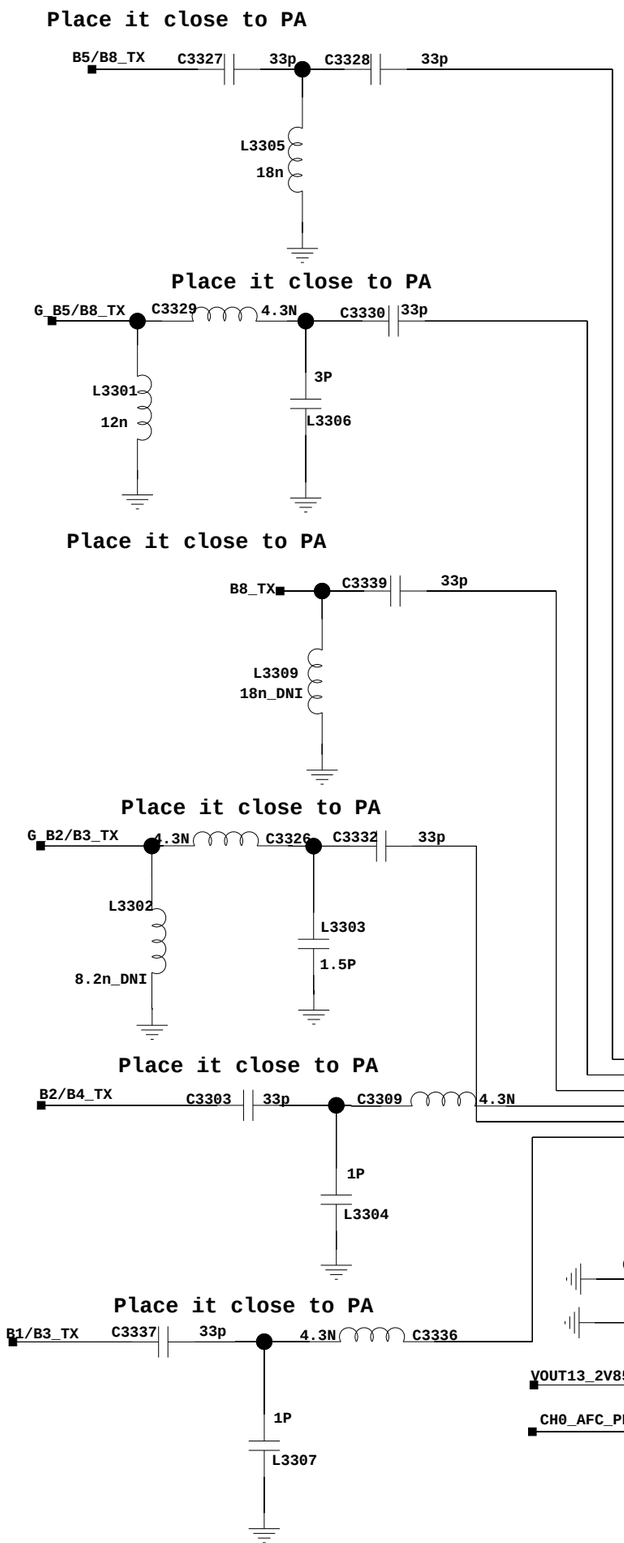

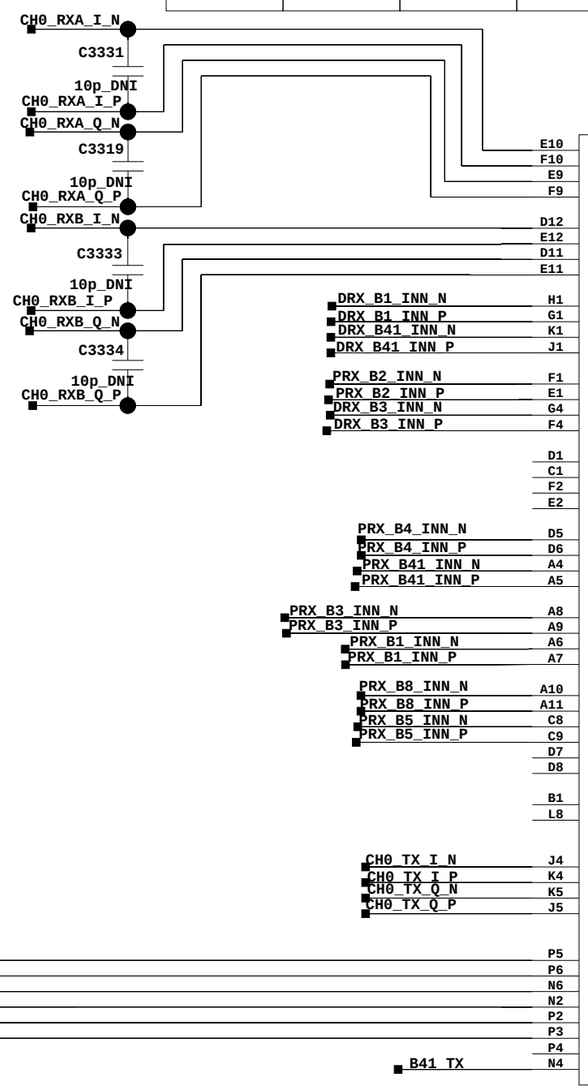

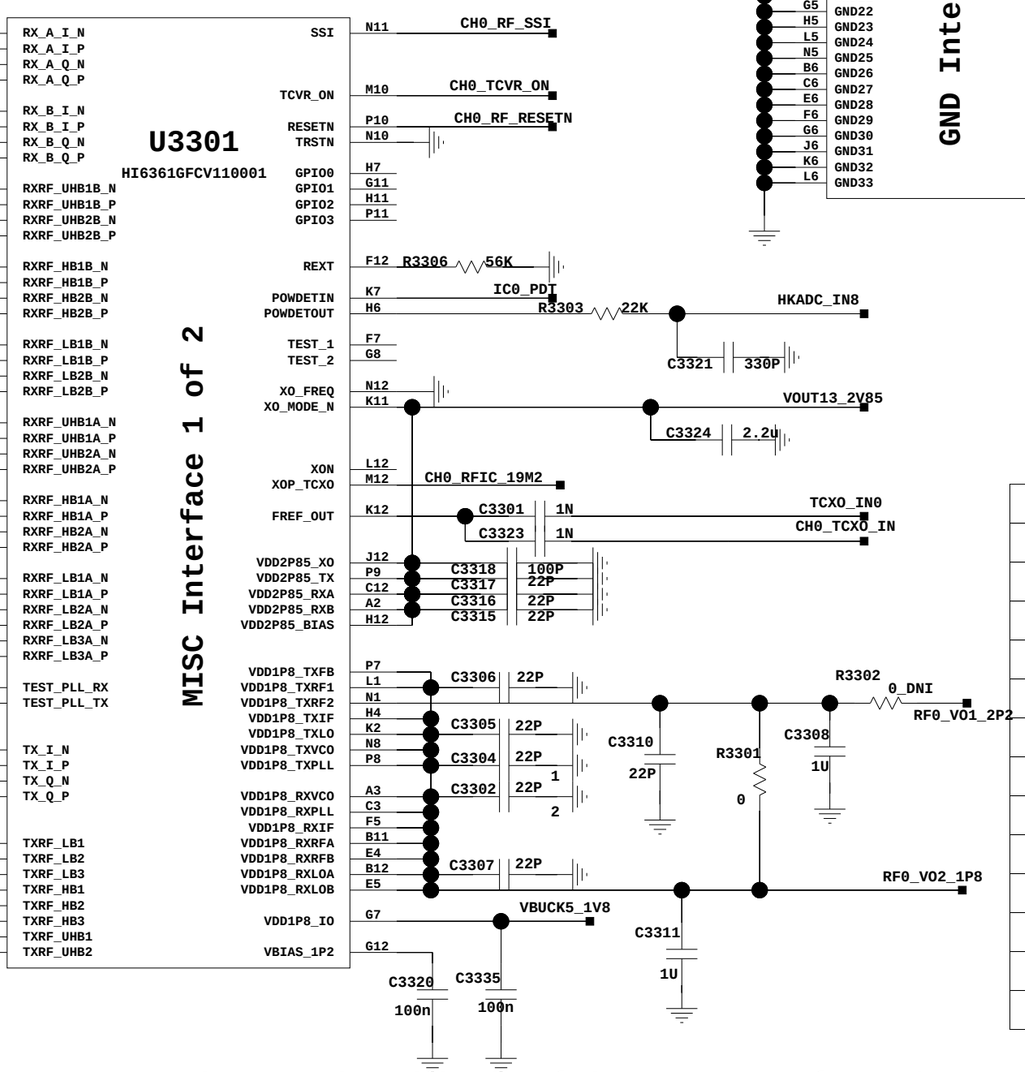

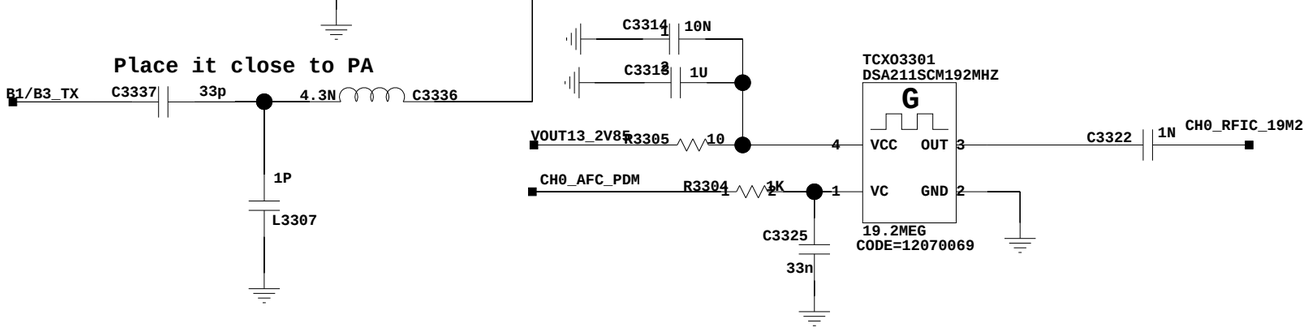

C3324	K11
R3306	F12
C3318	J12
C3317	P9
C3316	C12
C3315	A2
C3308	P7
C3306	L1
C3310	H4
C3305	K2
C3302	A3
C3307	B12
C3320	G12

The type and specification of the components refer to the BOM

				TBD For	20140523
				ECA NO	DATE
DESIGNED	yuanhailin/00265042	Grace_CL		03022QWC_SCHZH	
REVIEWED	wangweijie/00303684				
		VER	PART_NUMBER	SHEET 33 OF 60	
		B	0302XXXX	HUAWEI TECH CO.,LTD.	

34. TDD TX

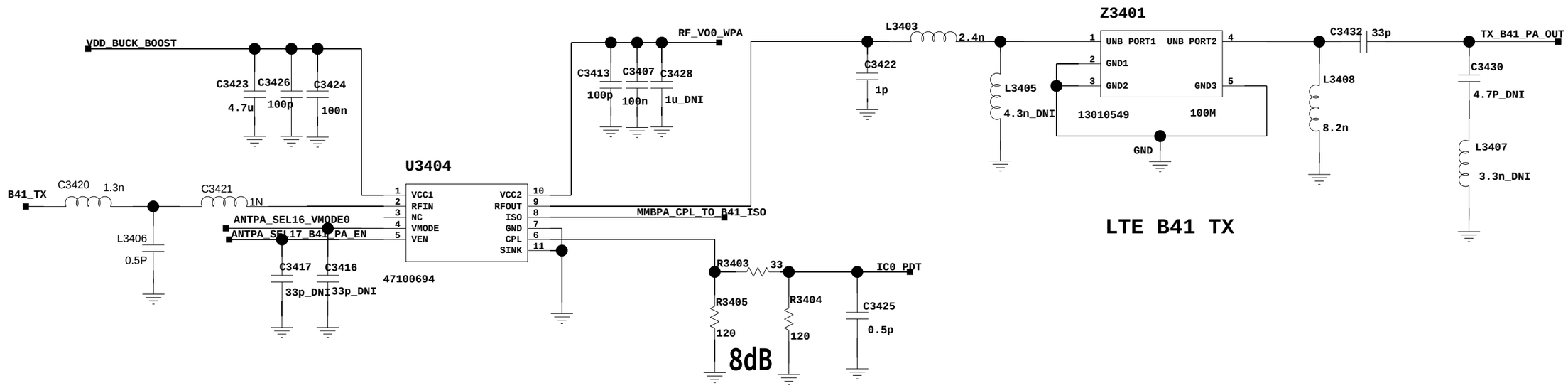

The type and specification of the components refer to the BOM

				TBD For	20140523
				ECA NO	DATE
DESIGNED	yuanhailin/00265042	Grace_CL		03022QWC_SCHZH	
REVIEWED	wangweijie/00303684				
		VER	PART_NUMBER	SHEET 34 OF 60	
		B	0301XXXX	HUAWEI TECH CO.,LTD.	

35. TDD RX

RX B41

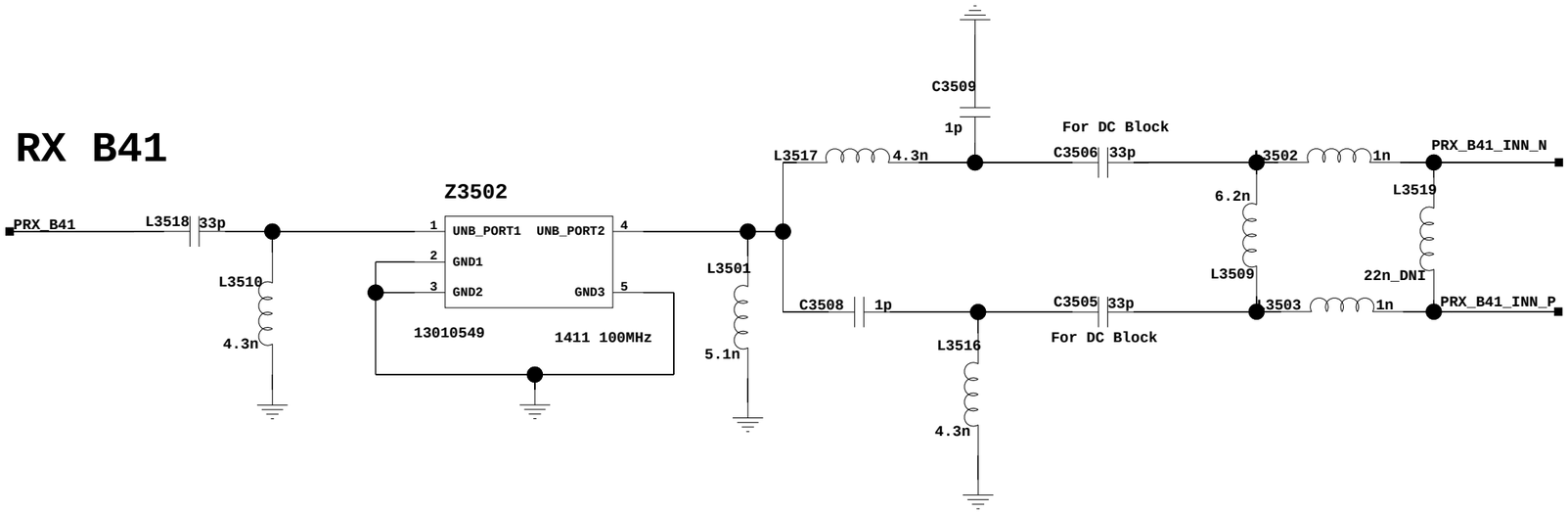

کانال ما در تلگرام

@JahanIC

The type and specification of the components refer to the BOM

				TBD For	20140523
				ECA NO	DATE
DESIGNED	yuanhailin/00265042	Grace_CL		03022QWC_SCHZH	
REVIEWED	wangweijie/00303684				
		VER	PART_NUMBER	SHEET 35 OF 60	
		B	0301XXXX	HUAWEI TECH CO.,LTD.	

36. Reserved

کانال ما در تلگرام

@JahanIC

The type and specification of the components refer to the BOM

				TBD For	20140523
				ECA NO	DATE
DESIGNED	yuanhailin/00265042	Grace_CL		03022QWC_SCHZH	
REVIEWED	wangweijie/00303684				
		VER	PART_NUMBER	SHEET 36 OF 60	
		B	0302XXXX	HUAWEI TECH CO.,LTD.	

37. UL B1/B2/B3/B4/B5/B8 Duplexer TRX

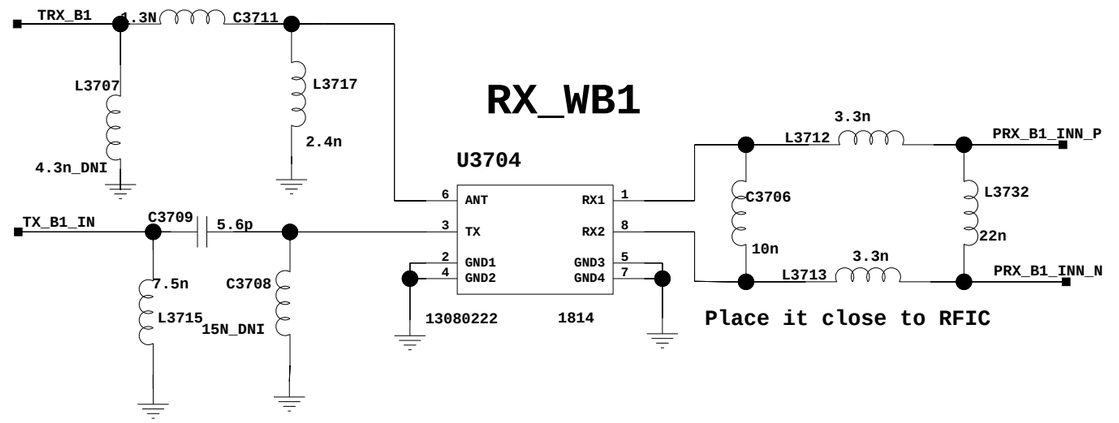

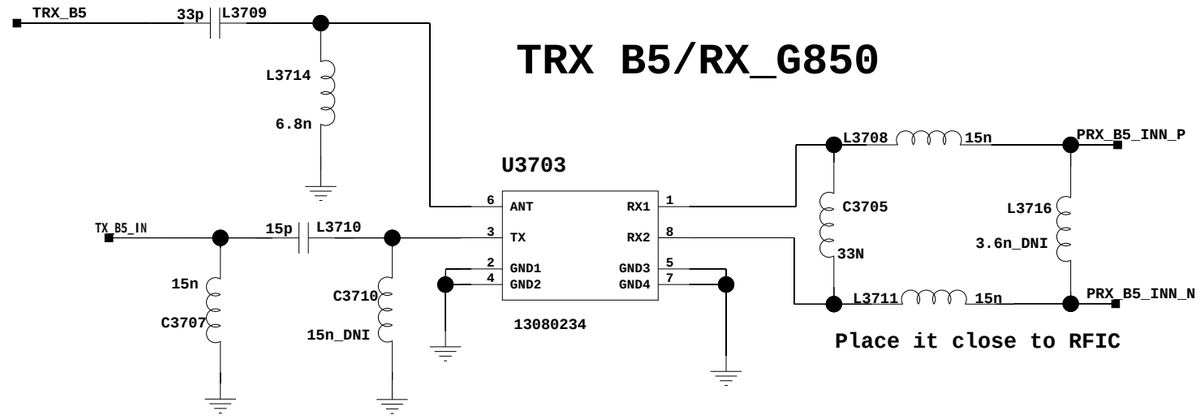

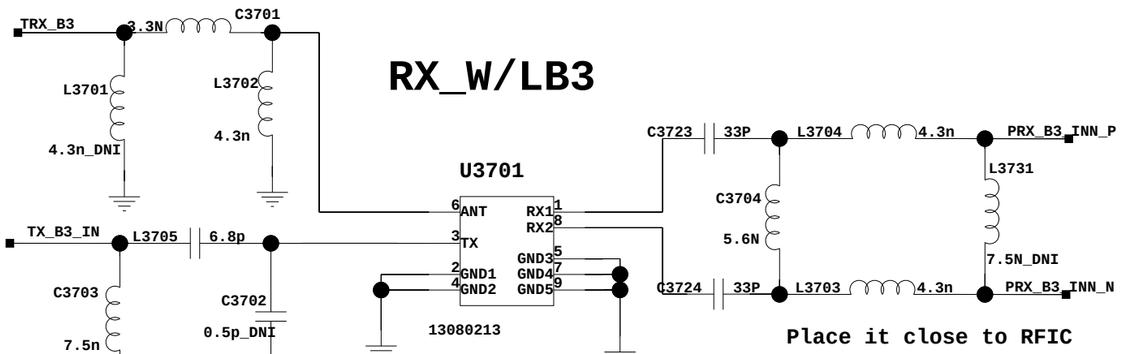

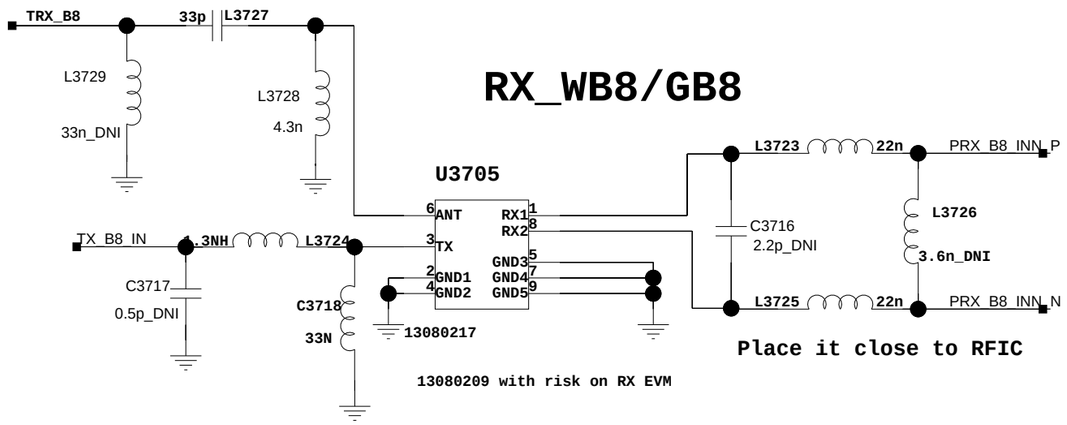

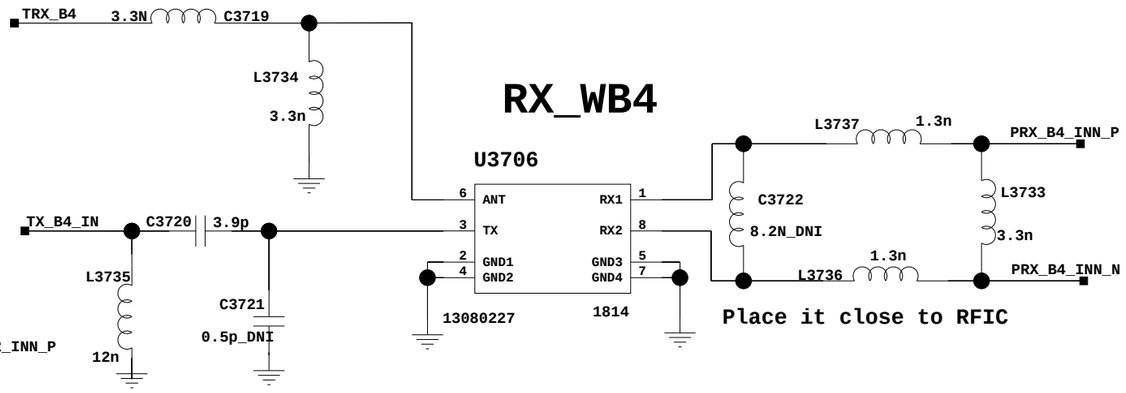

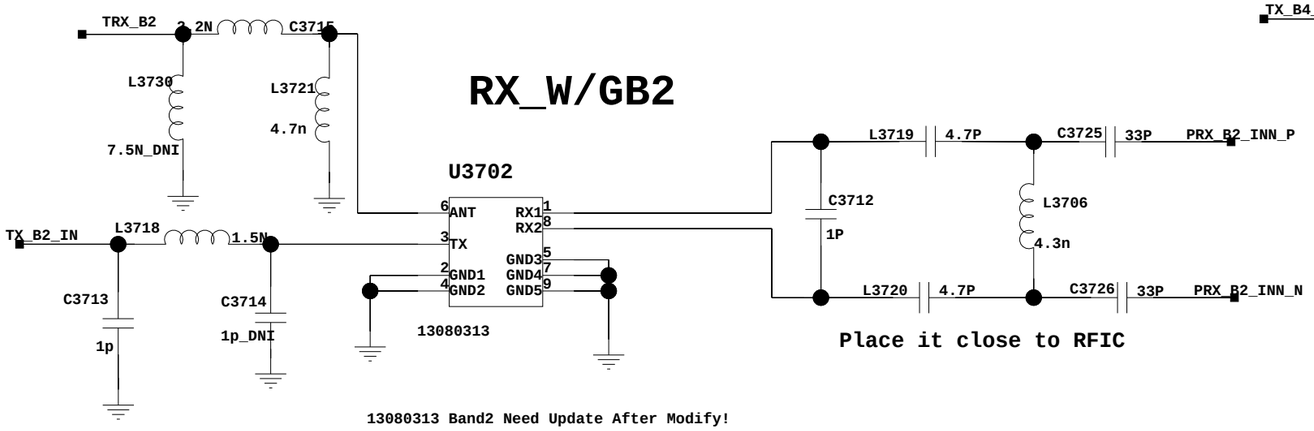

13080313 Band2 Need Update After Modify!

The type and specification of the components refer to the BOM

				TBD For	20140523
				ECA NO	DATE
DESIGNED	yuanhailin/00265042	Grace_CL		03022QWC_SCHZH	
REVIEWED	wangweijie/00303684				
		VER	PART_NUMBER	SHEET 37 OF 60	
		B	0302XXXX	HUAWEI TECH CO.,LTD.	

38.RF Front End: MMMBPA

a. RF7456 need B8_TX Input and output use Pin30;

b. 8817 use Pin4 input only and Pin3 NC

App Notes

1. Vramp for RF7456 never higher than 1.8V
2. ACPM-8817 is Linear PA and Pin25 need connect to GND
3. RF7456 Pin7 need NC and ACPM-8817 Pin5 NC
4. Pay attention TO Pin Map and Relationship

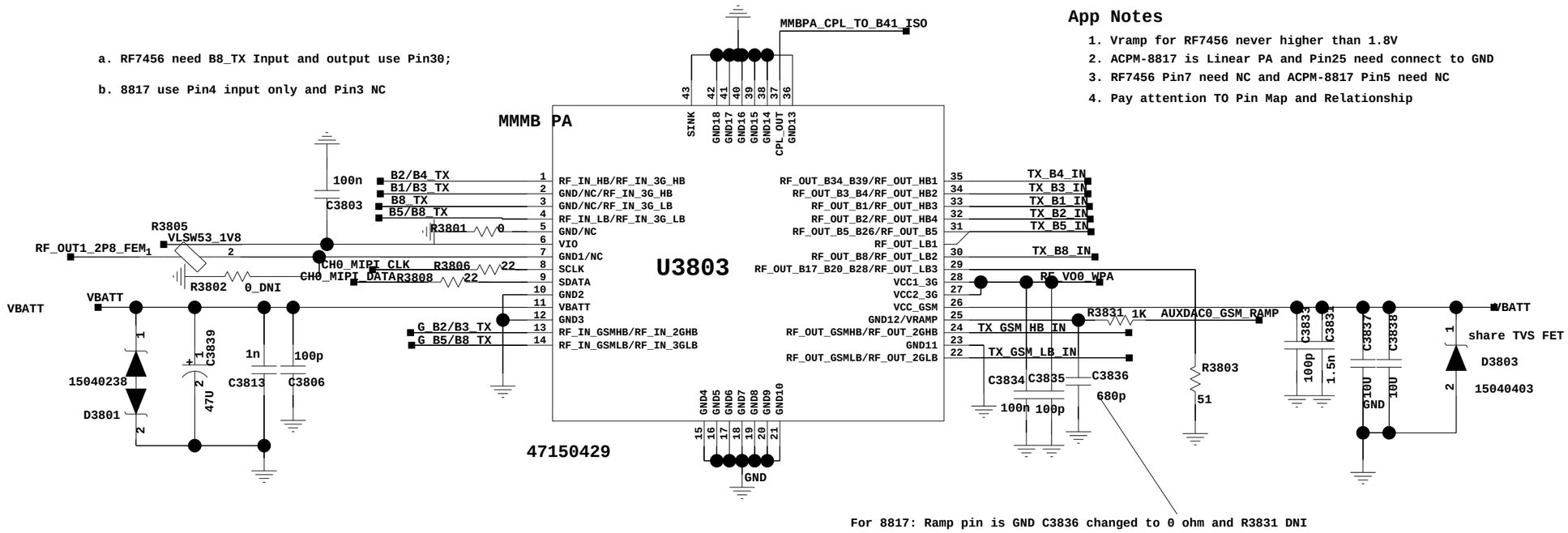

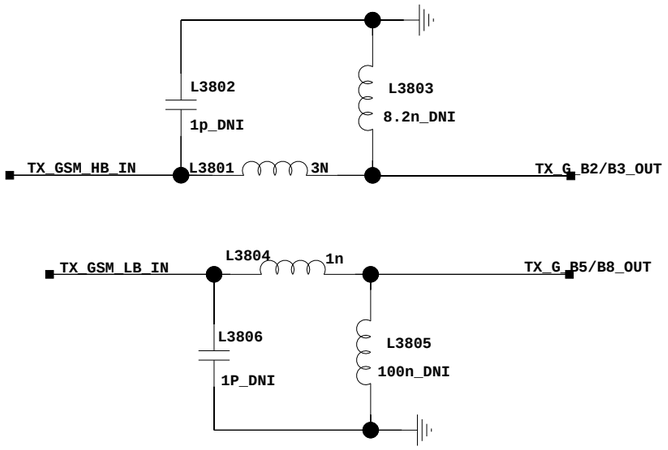

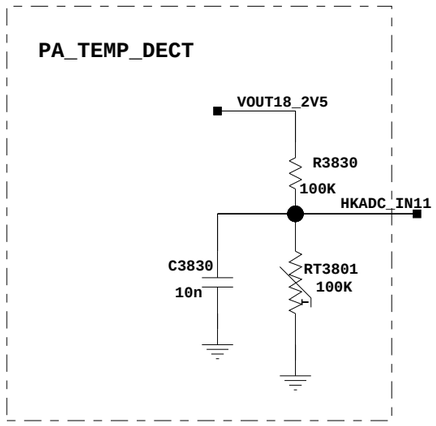

The type and specification of the components refer to the BOM

				NA	20120430
				ECA NO	DATE
DESIGNED	yuanhailin/00265042	Grace_CL		00001234	
REVIEWED	wangweijie/00303684				
		VER	PART_NUMBER	SHEET 38 OF 60	
		B	03030001	HUAWEI TECH CO.,LTD.	

39. RF Front End Switch /Main ANT

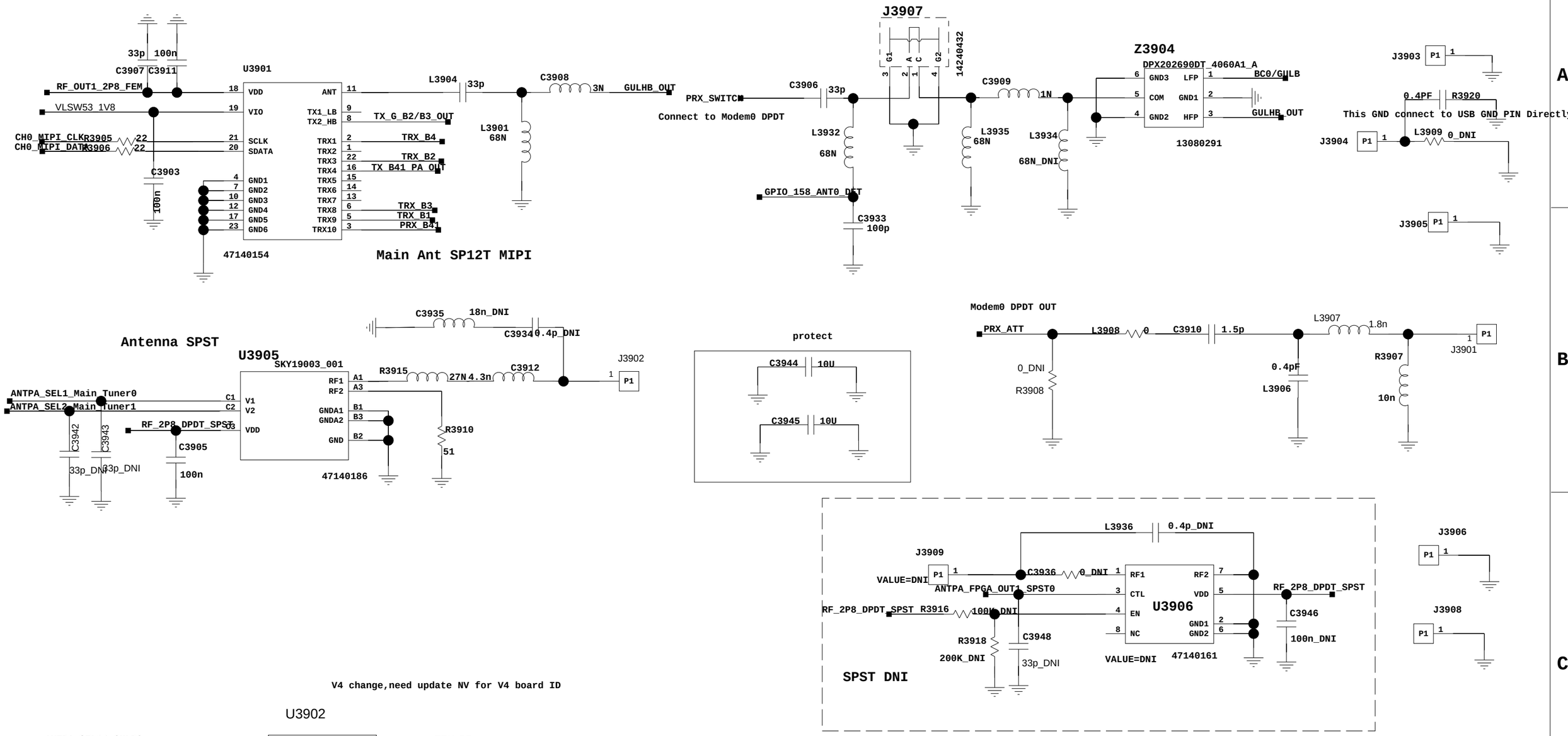

U3902 RF1119A Truth Table					
			GPIO14	GPIO15	GPIO12
RF1	TRX_B5		0	0	1
RF2	TRX_B8		0	1	1
RF3	TX_GSMLB		1	0	1
RF4	CDMA_BC0		1	1	1

SVLTE: GPIO 12/14/15 controled by AP

The type and specification of the components refer to the BOM

				NA	20140523
				ECA NO	DATE
DESIGNED	yuanhailin/00265042	Grace_CL		00001234	
REVIEWED	wangweijie/00303684				
		VER	PART_NUMBER	SHEET 39 OF 60	
		B		HUAWEI TECH CO.,LTD.	

40. Diversity

کانال ما در تلگرام

@JahanIC

U4000 SP3T Logic

Mode	V1	V2	V3	STATE
GPIO	ANTPA_SEL7	ANTPA_SEL8	ANTPA_SEL9	
ANT-RF1	1	0	0	DRX_B38/B41
ANT-RF2	0	1	0	DRX_B39
ANT-RF3	0	0	1	DRX_B40

The type and specification of the components refer to the BOM

				TBD For	20140523
				ECA NO	DATE
DESIGNED	yuanhailin/00265042	Grace_CL		03022QWC_SCHZH	
REVIEWED	wangweijie/00303684				
		VER	PART_NUMBER	SHEET 40 OF 60	
		B	0301XXXX	HUAWEI TECH CO.,LTD.	

41.CDMA Modem_VIA

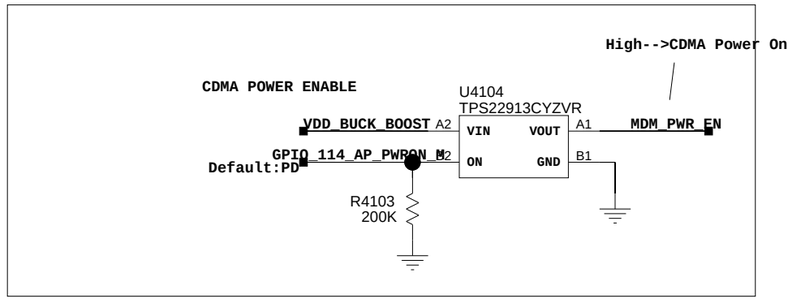

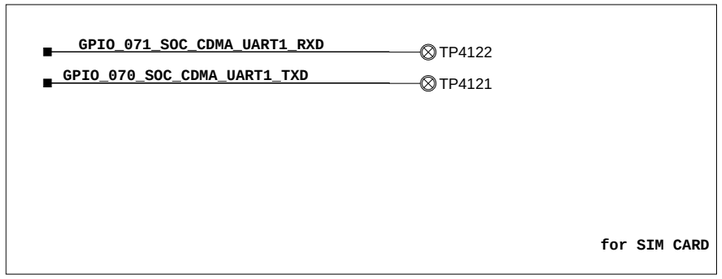

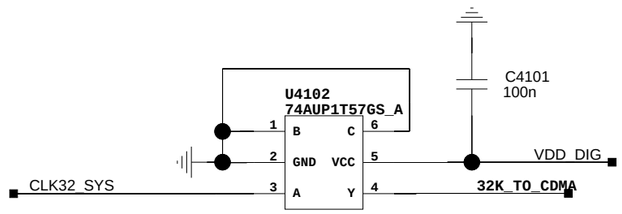

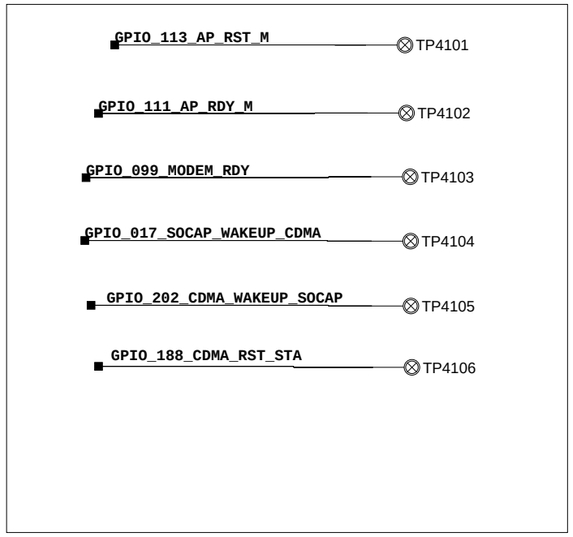

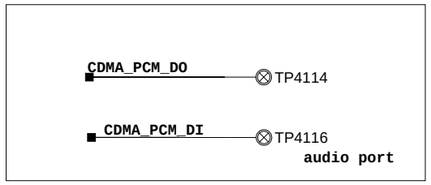

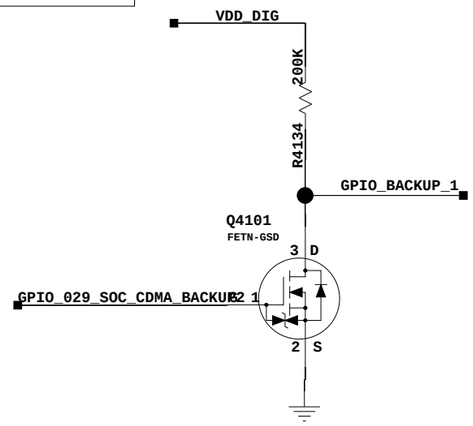

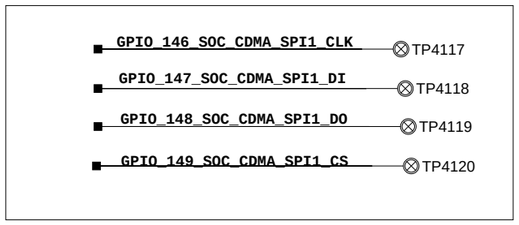

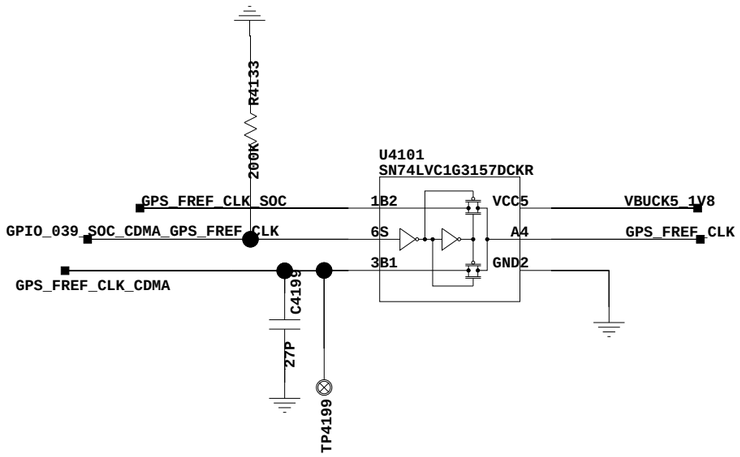

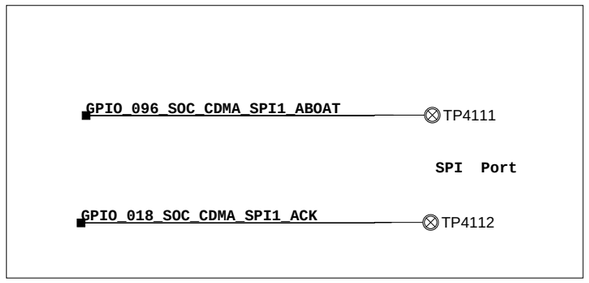

The type and specification of the components refer to the BOM

				NA	20140523
				ECA NO	DATE
DESIGNED	yuanhailin/00265042	Grace_CL		00001234	
REVIEWED	wangweijie/00303684				
		VER	PART_NUMBER	SHEET 41 OF 60	
		B	03030001	HUAWEI TECH CO.,LTD.	

42.CDMA Modem_VIA

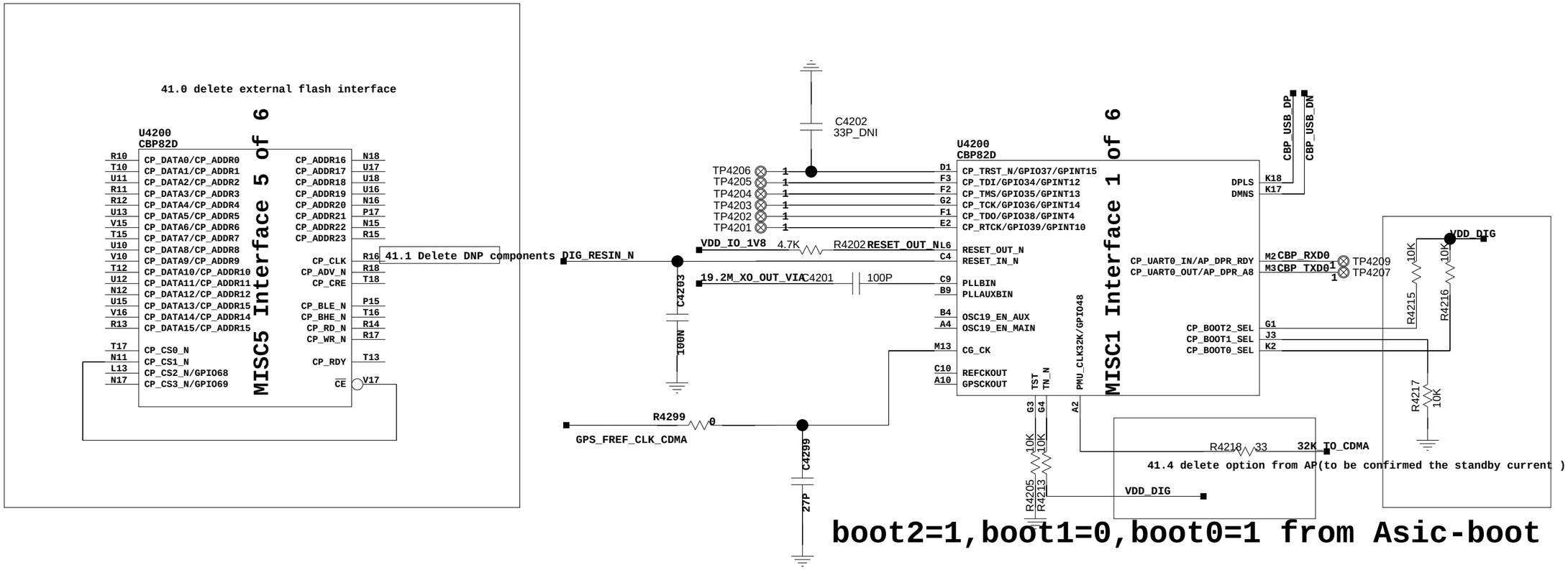

boot2=1,boot1=0,boot0=1 from Asic-boot

کانال ما در تلگرام

@JahanIC

The type and specification of the components refer to the BOM

				NA	20140523
				ECA NO	DATE
DESIGNED	yuanhailin/00265042	Grace_CL		03011DRH_SCHZH	
REVIEWED	wangweijie/00303684				
		VER	PART_NUMBER	SHEET 42 OF 60	
		B	03022MYN	HUAWEI TECH CO.,LTD.	

43.CDMA Modem_VIA

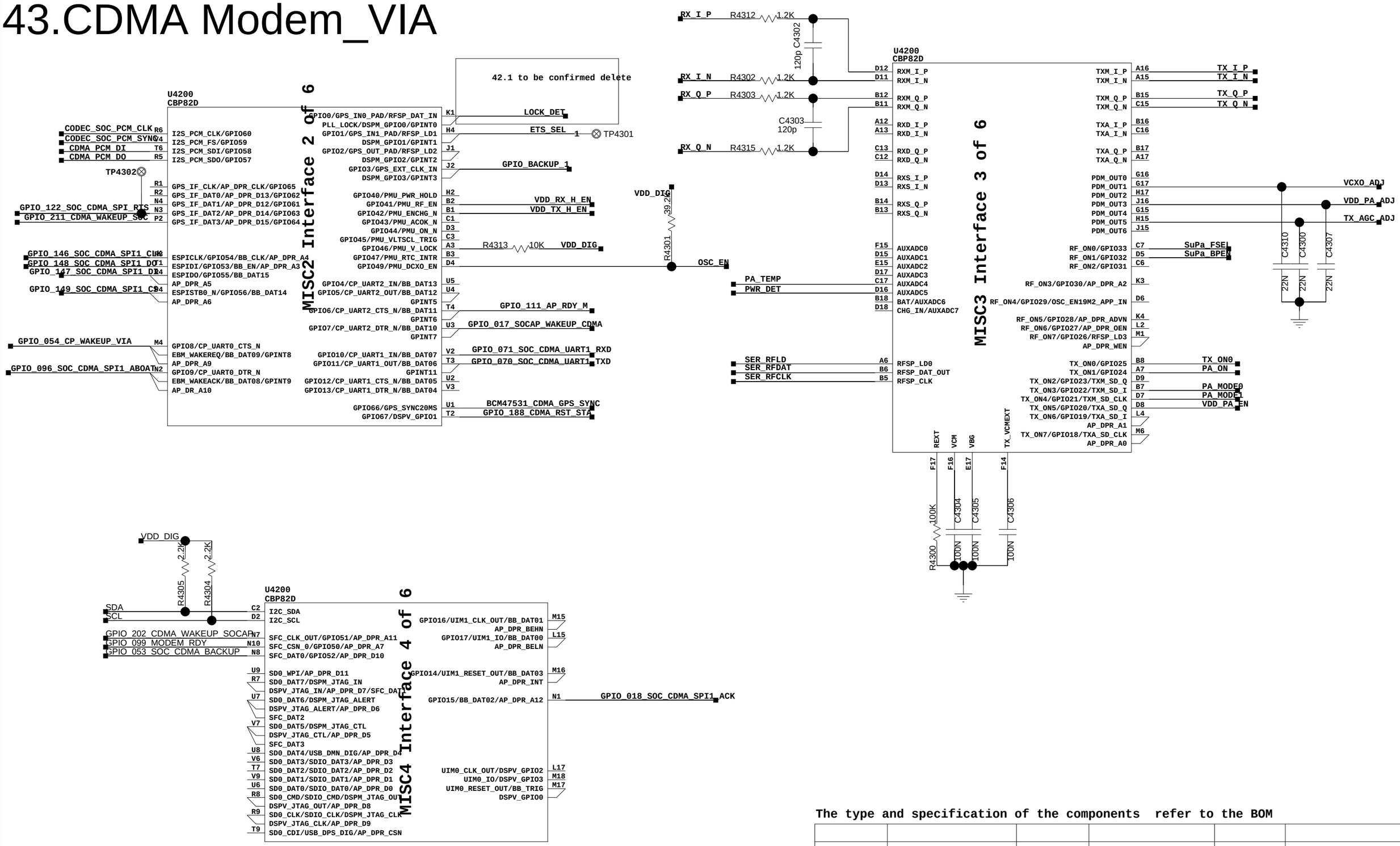

The type and specification of the components refer to the BOM

				NA	20140523
				ECA NO	DATE
DESIGNED	yuanhailin/00265042	Grace_CL		03011DRH_SCHZH	
REVIEWED	wangweijie/00303684				
		VER	PART_NUMBER	SHEET 43 OF 60	
		B	03022MYN	HUAWEI TECH CO.,LTD.	

44.CDMA Modem_VIA

44.1 to be confirmed to simplify capacitors

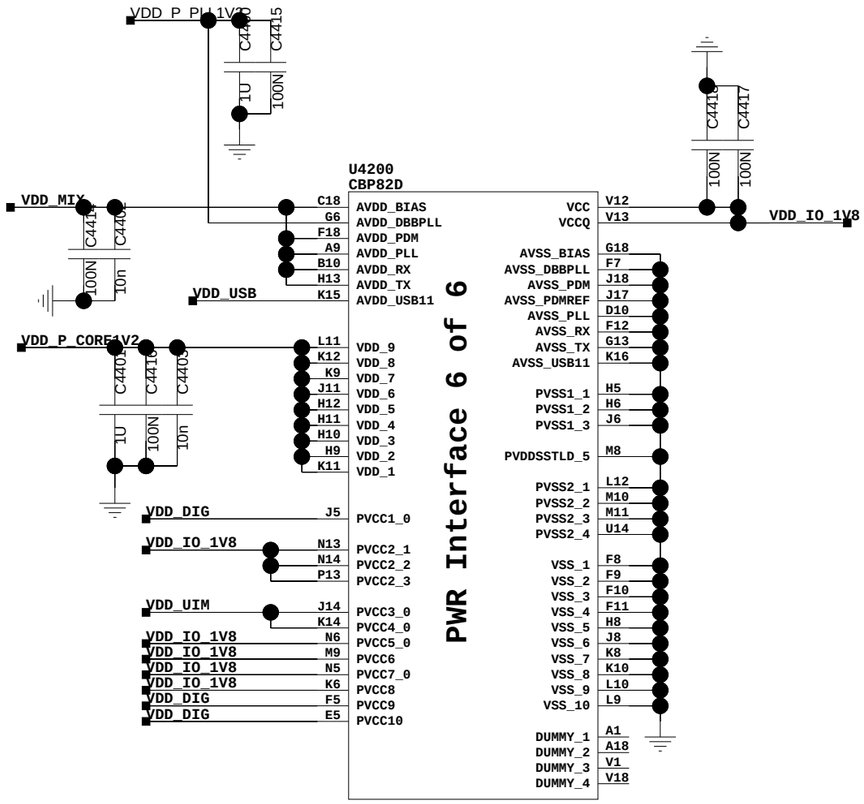

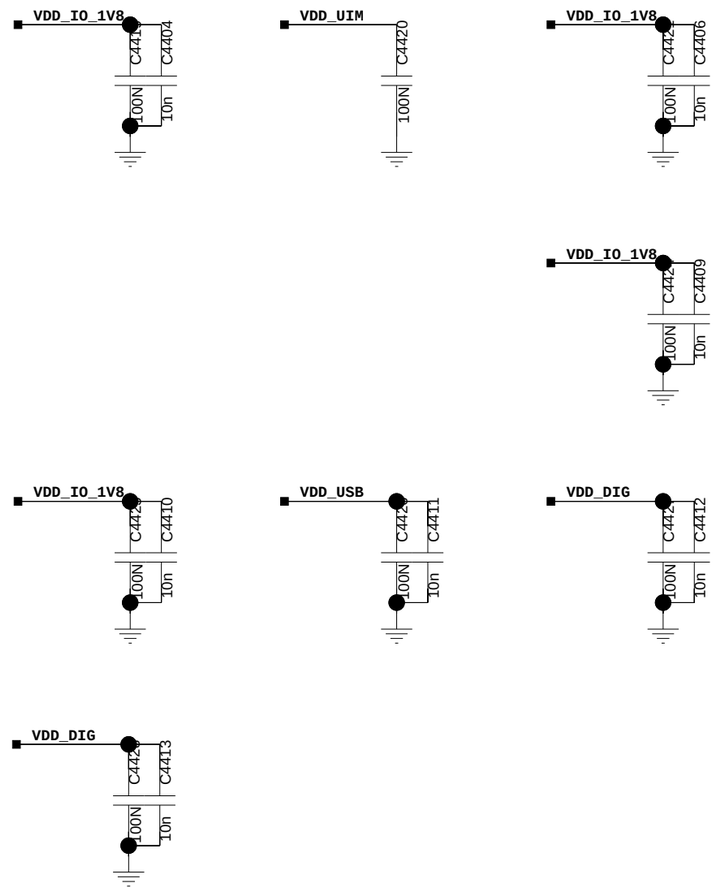

کانال ما در تلگرام

@JahanIC

The type and specification of the components refer to the BOM

				NA	20140523
				ECA NO	DATE
DESIGNED	yuanhailin/00265042	Grace_CL		03011DRH_SCHZH	
REVIEWED	wangweijie/00303684				
		VER	PART_NUMBER	SHEET 44 OF 60	
		B	03022MYN	HUAWEI TECH CO.,LTD.	

45.CDMA Modem_VIA

For support 4.35v high voltage battery

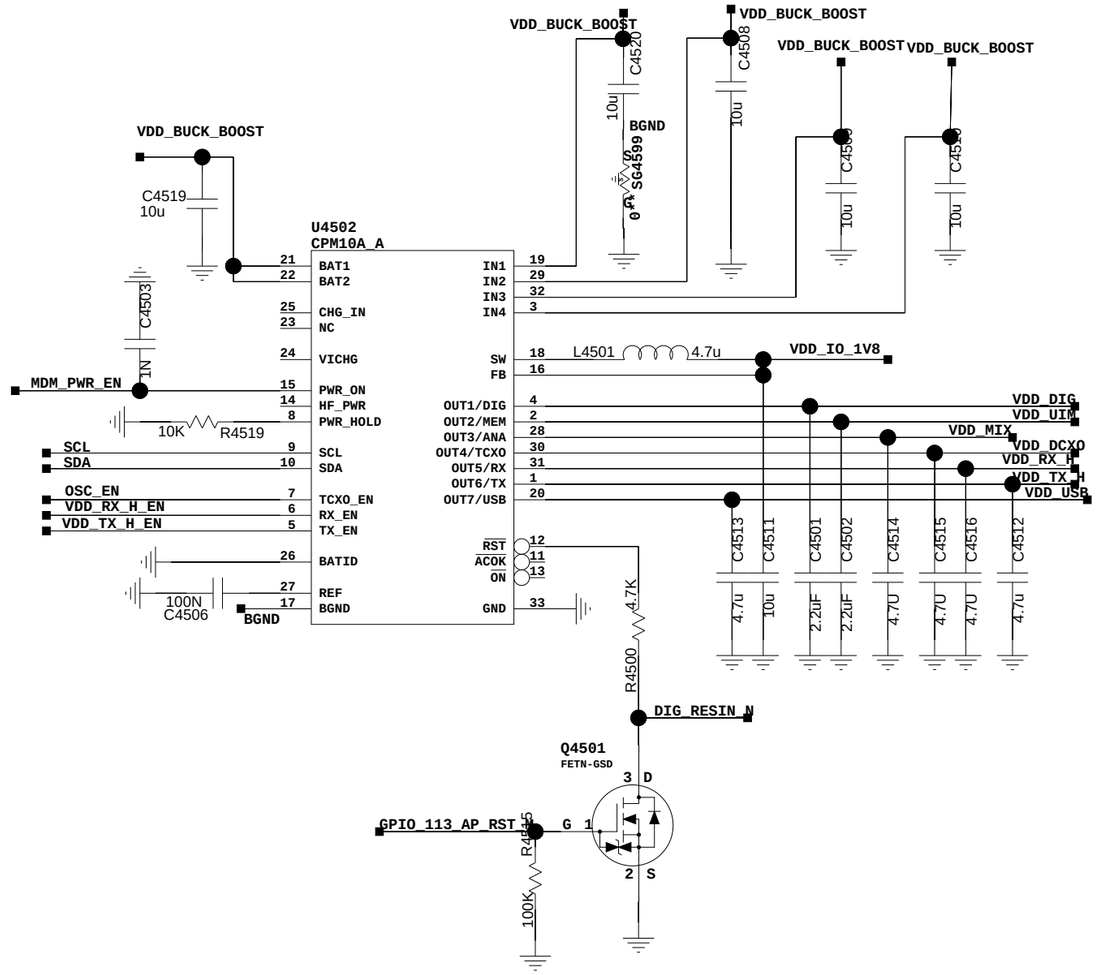

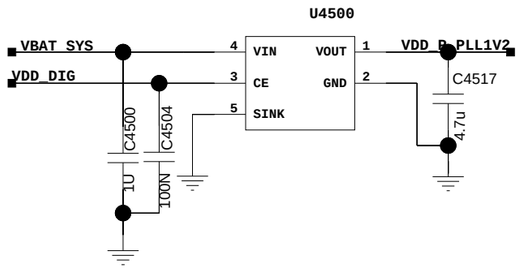

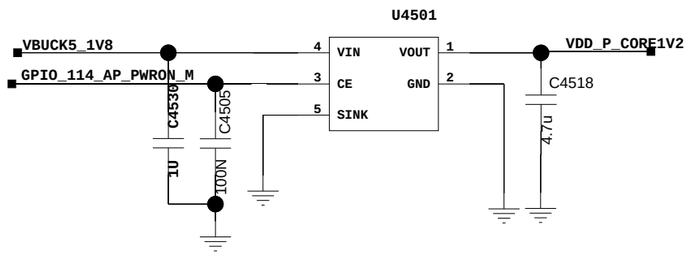

The type and specification of the components refer to the BOM

				NA	20140523
				ECA NO	**DATE**
DESIGNED	yuanhailin/00265042	Grace_CL		03011DRH_SCHZH	
REVIEWED	wangweijie/00303684				
		VER	**PART_NUMBER**	**SHEET** 45 **OF** 60	
		B	03022MYN	**HUAWEI TECH CO.,LTD.**	

46.CDMA RFIC

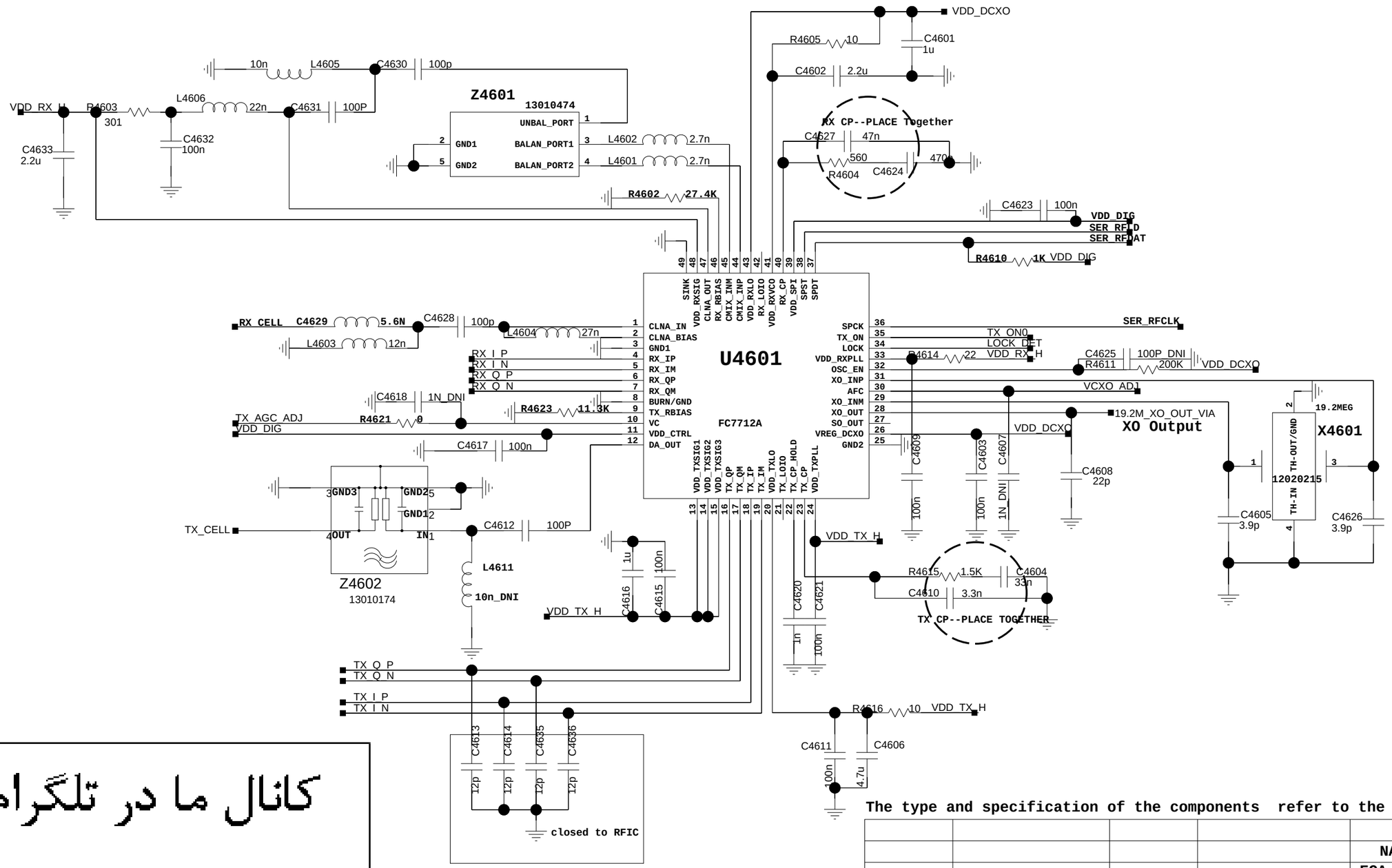

The type and specification of the components refer to the BOM

				NA	20140523
				ECA NO	DATE
DESIGNED	yuanhailin/00265042	Grace_CL		03011DRH_SCHZH	
REVIEWED	wangweijie/00303684				
		VER	PART_NUMBER	SHEET 46 OF 60	
		B	03022MYN	HUAWEI TECH CO.,LTD.	

کانال ما در تلگرام

@JahanIC

47.TX/PA

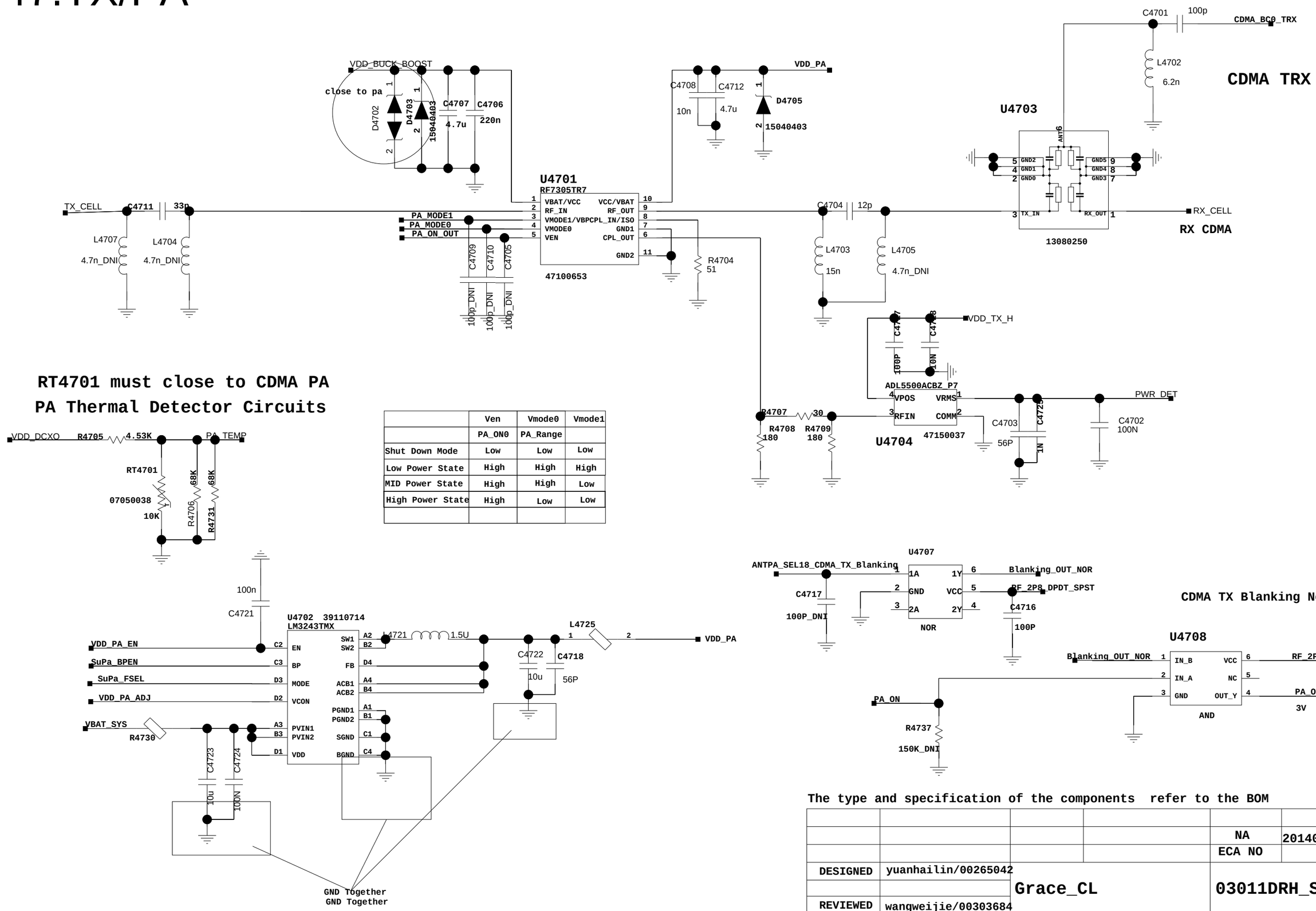

	Ven	Vmode0	Vmode1
	PA_ON0	PA_Range	
Shut Down Mode	Low	Low	Low
Low Power State	High	High	High
MID Power State	High	High	Low
High Power State	High	Low	Low

The type and specification of the components refer to the BOM

				NA	20140523
				ECA NO	DATE
DESIGNED	yuanhailin/00265042	Grace_CL		03011DRH_SCHZH	
REVIEWED	wangweijie/00303684				
		VER	PART_NUMBER	SHEET 47 OF 60	
		B	03022MYN	HUAWEI TECH CO.,LTD.	

48. LTE Diversity

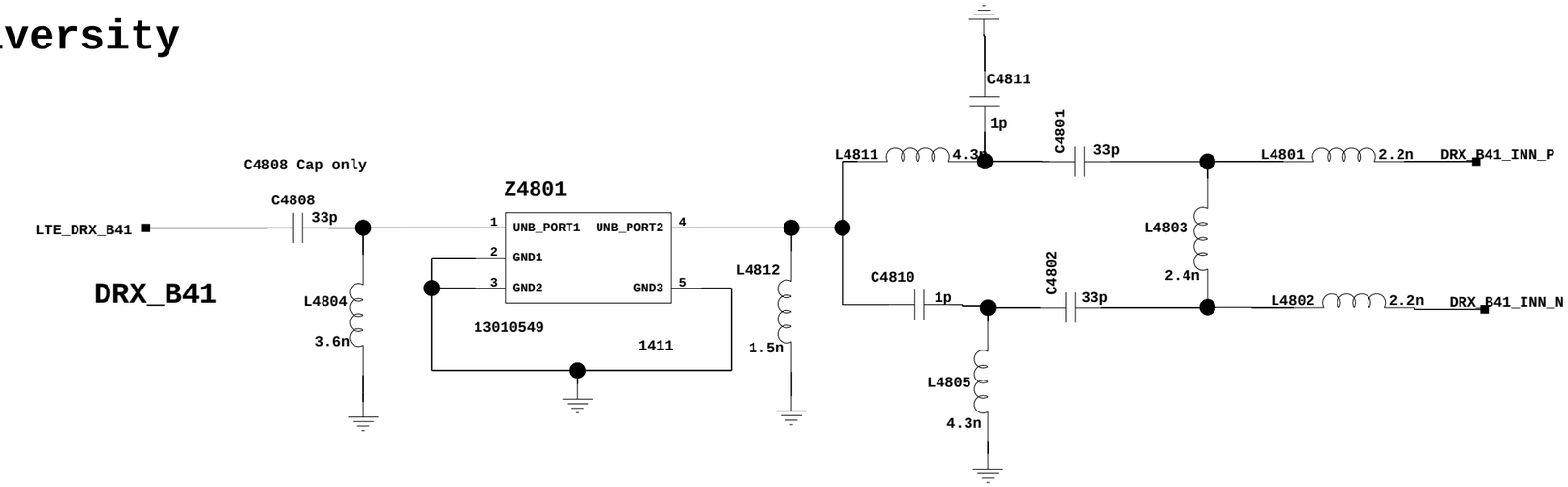

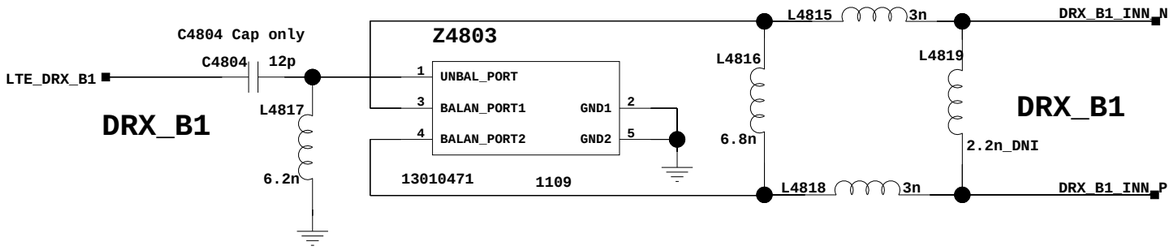

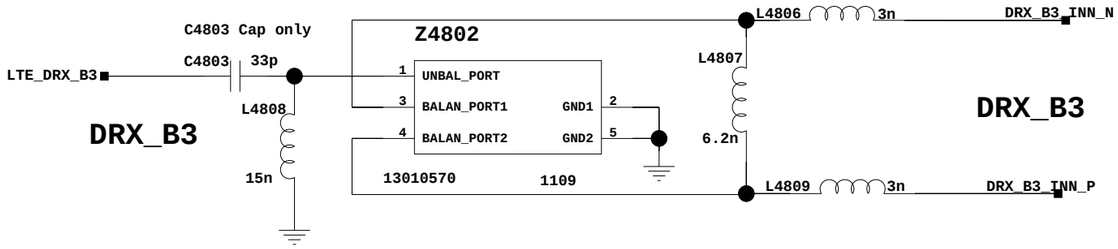

کانال ما در تلگرام

@JahanIC

The type and specification of the components refer to the BOM

				TBD For	20140523
				ECA NO	DATE
DESIGNED	yuanhailin/00265042	Grace_CL		03022QWC_SCHZH	
REVIEWED	wangweijie/00303684				
		VER	PART_NUMBER	SHEET 48	OF 60
		B	0301XXXX	HUAWEI TECH CO.,LTD.	

49. LTE LNA FrontEnd

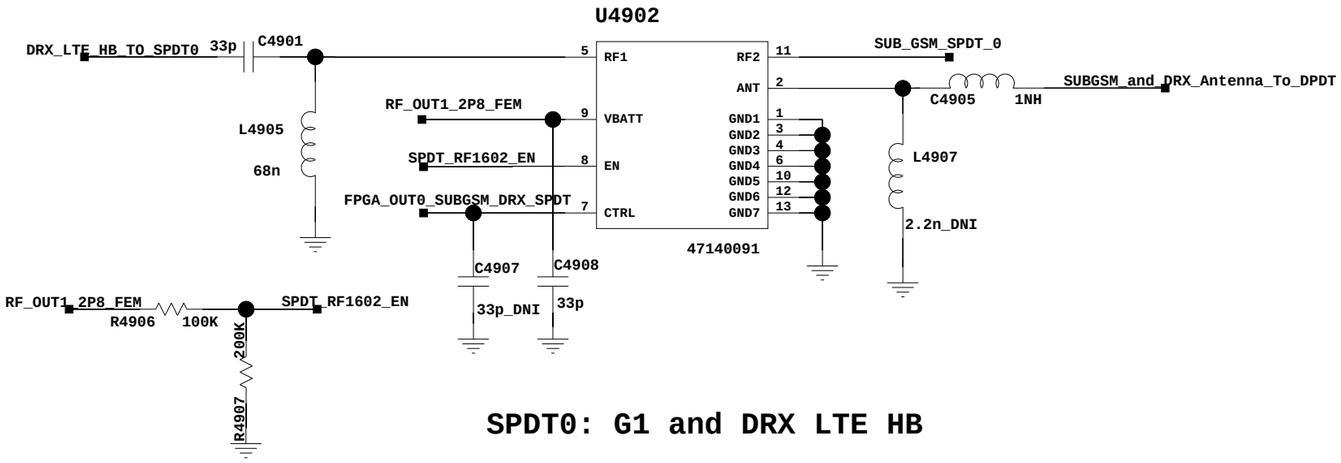

SPDT0: G1 and DRX LTE HB

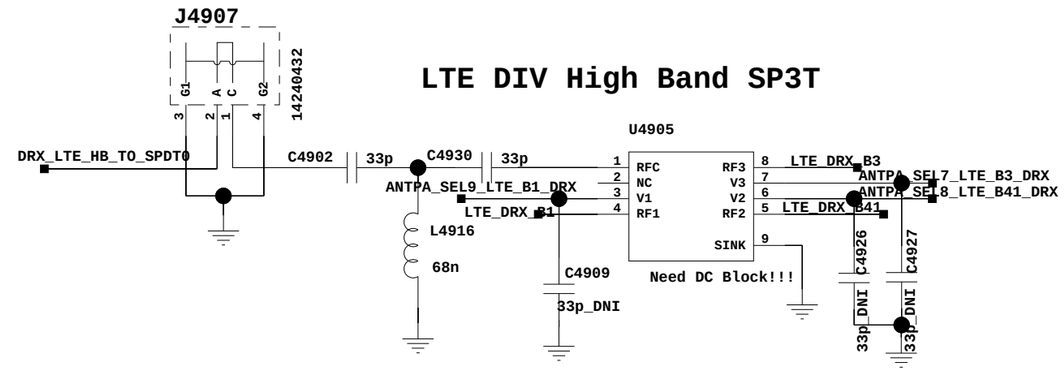

The type and specification of the components refer to the BOM

				NA	20140523
				ECA NO	DATE
DESIGNED	yuanhailin/00265042	Grace_CL		03011BUN_SCHZH	
REVIEWED	wangweijie/00303684				
		VER	PART_NUMBER	SHEET 49 OF 60	
		B	03022KNL	HUAWEI TECH CO.,LTD.	

50 Reserved

کانال ما در تلگرام

@JahanIC

The type and specification of the components refer to the BOM

				NA	20140523
				ECA NO	DATE
DESIGNED	yuanhailin/00265042	Grace_CL		00001234	
REVIEWED	wangweijie/00303684				
		VER	PART_NUMBER	SHEET 50 OF 60	
		B	03030001	HUAWEI TECH CO.,LTD.	

51 Reserved

کانال ما در تلگرام

@JahanIC

The type and specification of the components refer to the BOM

				NA	20140523
				ECA NO	DATE
DESIGNED	yuanhailin/00265042	Grace_CL		NA	
REVIEWED	wangweijie/00303684				
		VER	PART_NUMBER	SHEET 51 OF 60	
		B	03021000	HUAWEI TECH CO.,LTD.	

52.BT/WLAN/FM

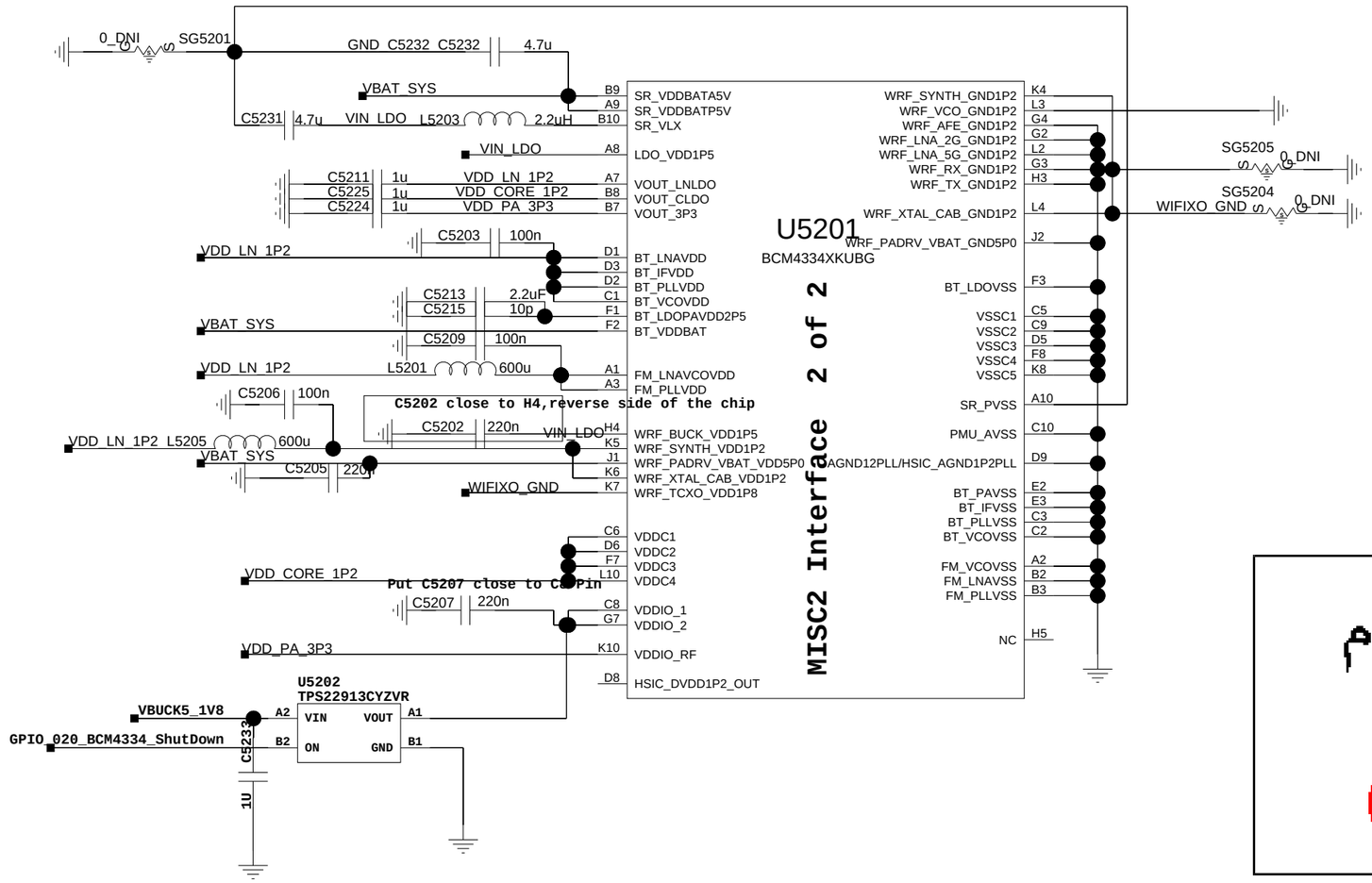

کانال ما در تلگرام

@JahanIC

The type and specification of the components refer to the BOM

				NA	20140523
				ECA NO	DATE
DESIGNED	yuanhailin/00265042	Grace_CL		03011ALH	
REVIEWED	wangweijie/00303684				
		VER	PART_NUMBER	SHEET 52 OF 60	
		B	03011ALH	HUAWEI TECH CO.,LTD.	

53. Connectivity(BT/WiFi/FM)-BB

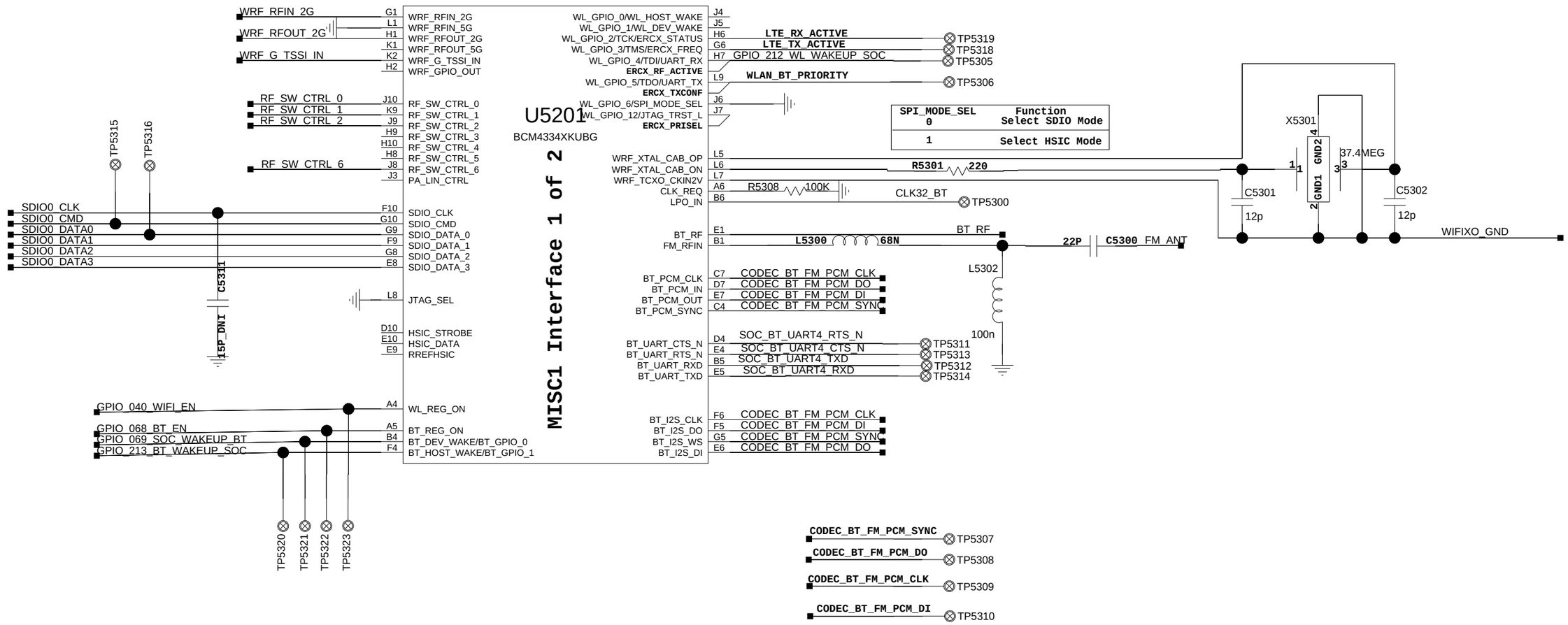

The type and specification of the components refer to the BOM

				NA	20140523
				ECA NO	DATE
DESIGNED	yuanhailin/00265042	Grace_CL		03011ALH	
REVIEWED	wangweijie/00303684				
		VER	PART_NUMBER	SHEET 53 OF 60	
		B	03011ALH	HUAWEI TECH CO.,LTD.	

54.WIFI_RF_FrontEnd_2.4GHz

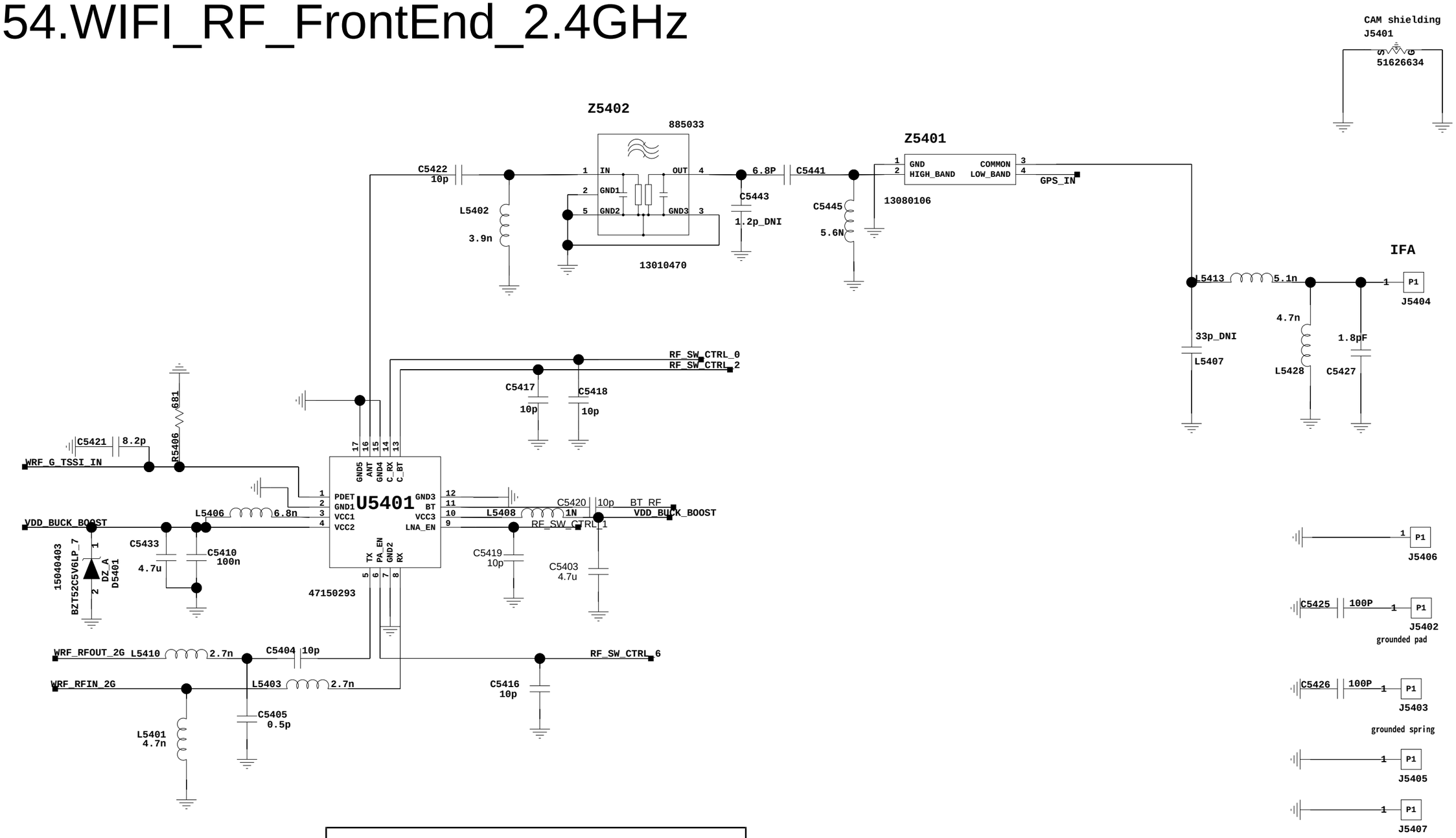

کانال ما در تلگرام

@JahanIC

The type and specification of the components refer to the BOM

				NA	20140523
				ECA NO	DATE
DESIGNED	yuanhailin/00265042	Grace_CL		00001234	
REVIEWED	wangweijie/00303684				
		VER	PART_NUMBER	SHEET 54 OF 60	
		B	KINGKONG	HUAWEI TECH CO.,LTD.	

55. 5G wifi

The type and specification of the components refer to the BOM

				NA	20140523
				ECA NO	DATE
DESIGNED	yuanhailin/00265042	Grace_CL		00000000	
REVIEWED	wangweijie/00303684				
		VER	PART_NUMBER	SHEET 55 OF 60	
		B	HL1G720M	HUAWEI TECH CO.,LTD.	

56. GPS

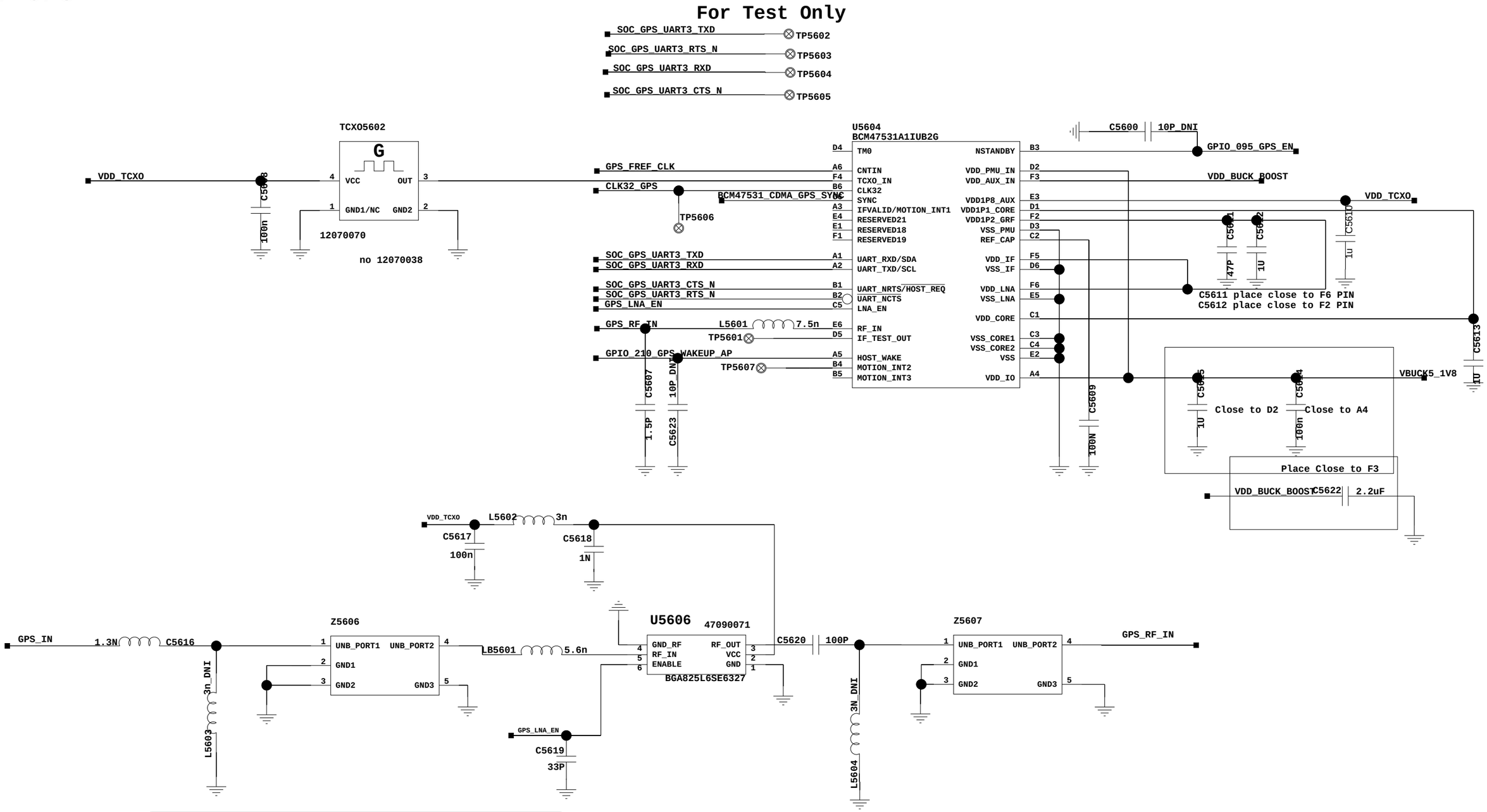

کانال ما در تلگرام

@JahanIC

The type and specification of the components refer to the BOM

				TBD For	20140523
				ECA NO	DATE
DESIGNED	yuanhailin/00265042	Grace_CL		03022QWC_SCHZH	
REVIEWED	wangweijie/00303684				
		VER	PART_NUMBER	SHEET 56 OF 60	
		B	0302XXXX	HUAWEI TECH CO.,LTD.	

57.NFC

I2C address=0101000(0x24)

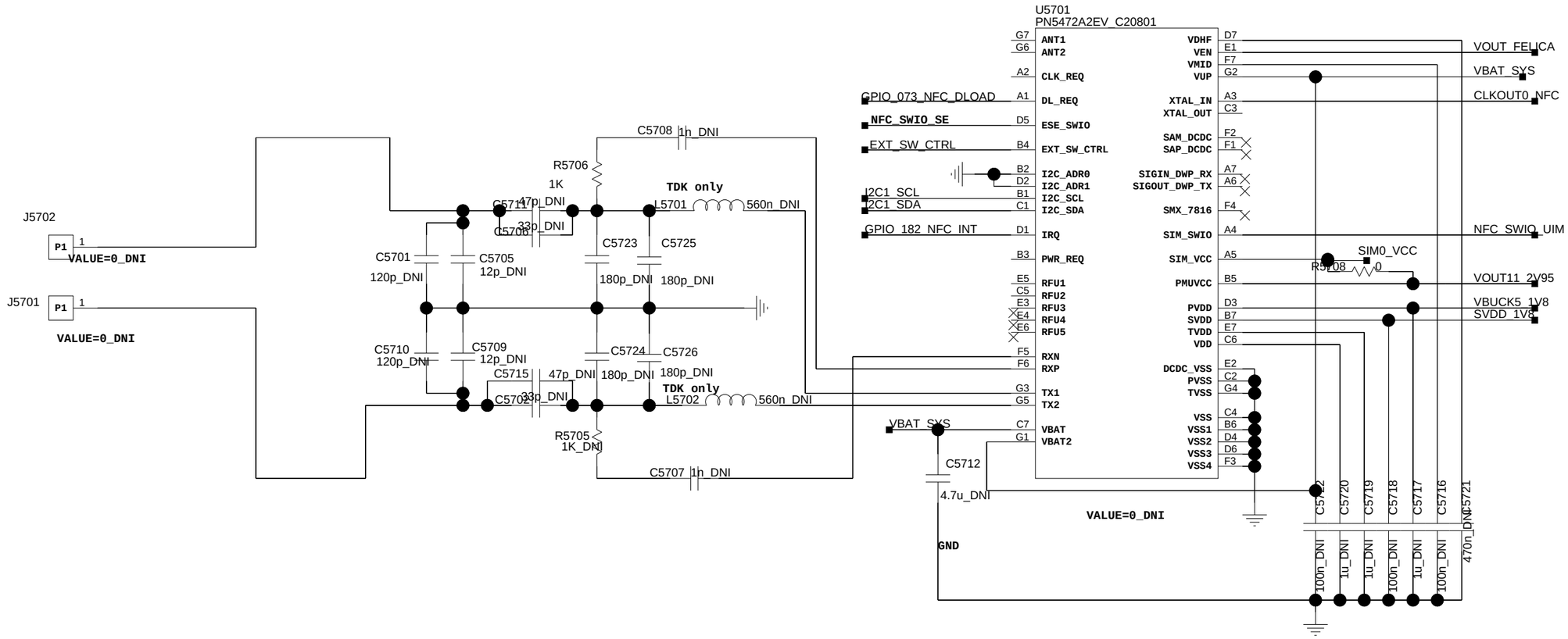

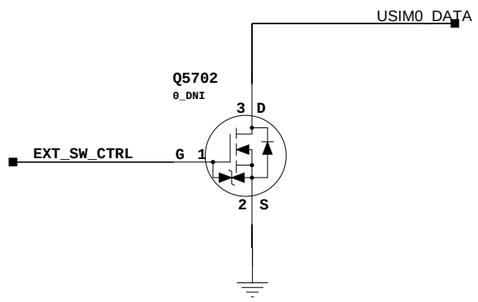

The type and specification of the components refer to the BOM

				NA	20140523
				ECA NO	DATE
DESIGNED	yuanhailin/00265042	Grace_CL		03011BUN_SCHZH	
REVIEWED	wangweijie/00303684				
		VER	PART_NUMBER	SHEET 57 OF 60	
		B	03022KNL	HUAWEI TECH CO.,LTD.	

58.RF Transceiver2

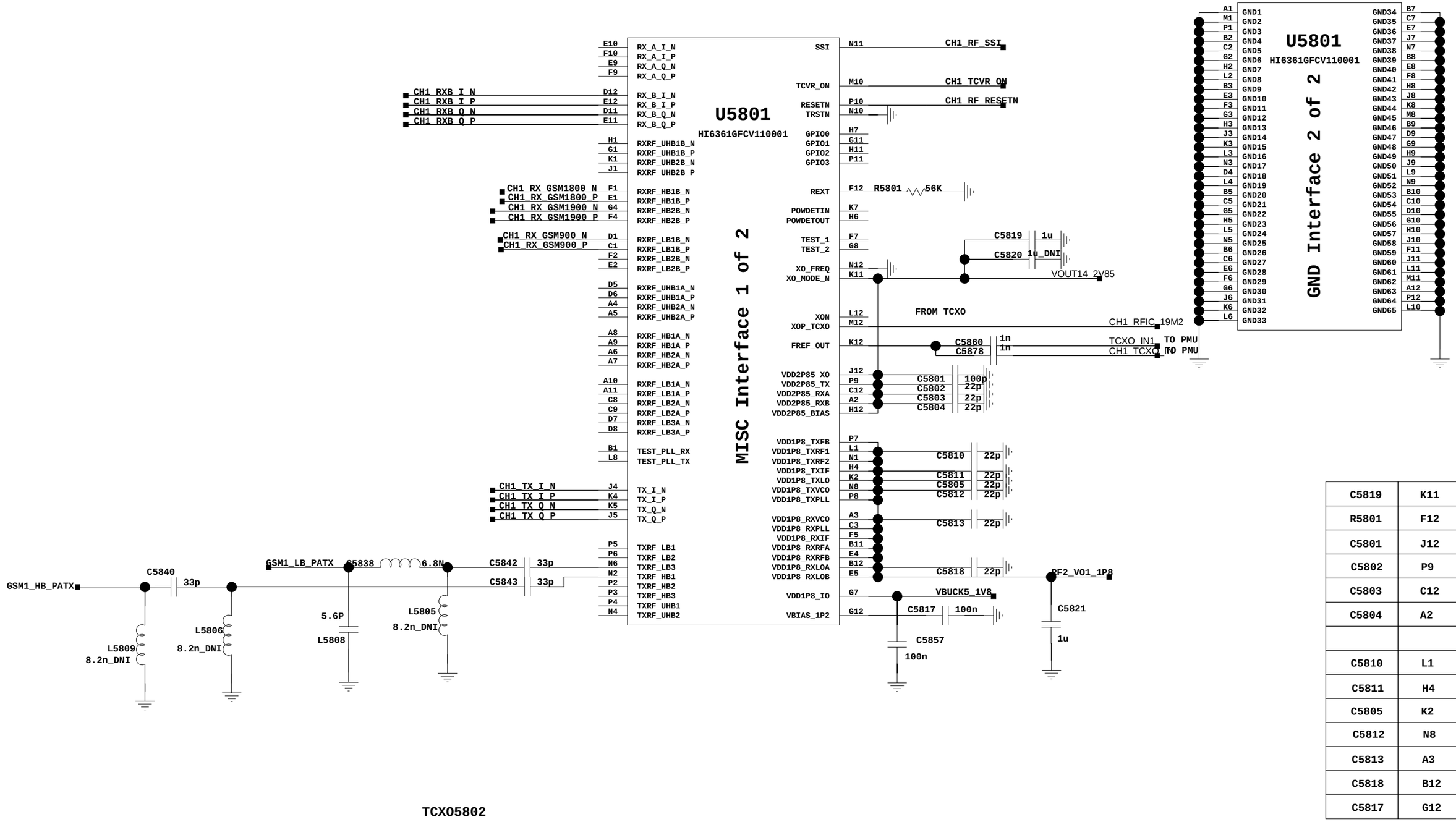

C5819	K11
R5801	F12
C5801	J12
C5802	P9
C5803	C12
C5804	A2
C5810	L1
C5811	H4
C5805	K2
C5812	N8
C5813	A3
C5818	B12
C5817	G12

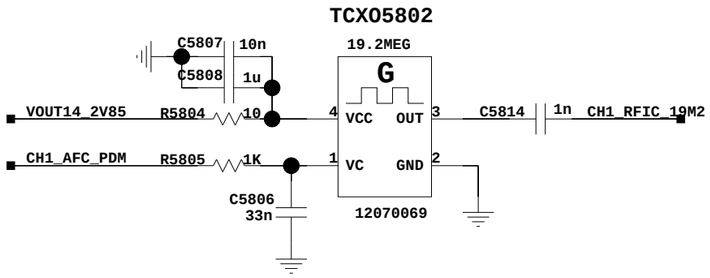

The type and specification of the components refer to the BOM

				NA	20140523
				ECA NO	DATE
DESIGNED	yuanhailin/00265042				
		Grace_CL		00001234	
REVIEWED	wangweijie/00303684				
		VER	PART_NUMBER	SHEET 58 OF 60	
		B	03030001	HUAWEI TECH CO.,LTD.	

59. RFIC2_GSM PA+Switch

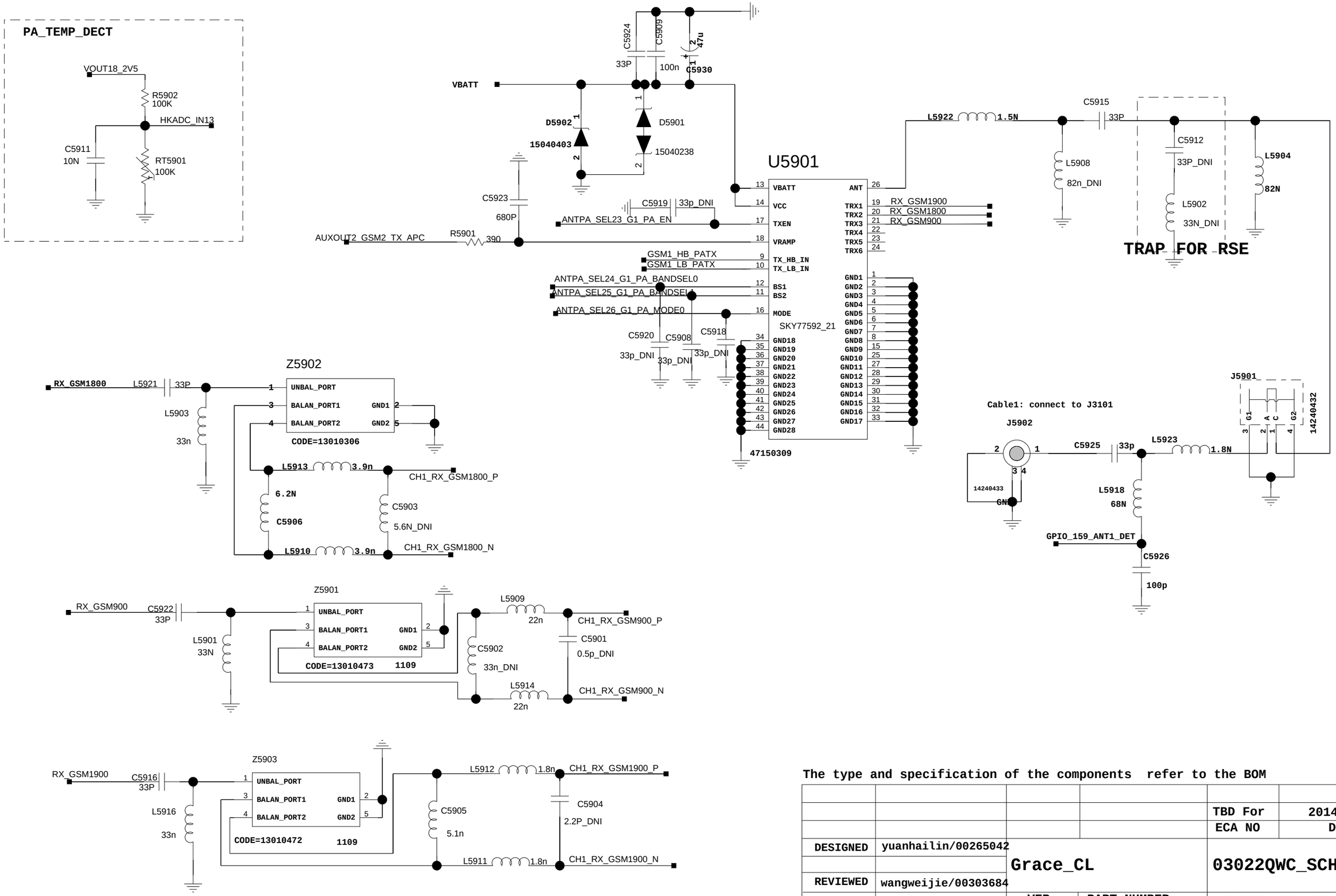

The type and specification of the components refer to the BOM

				TBD For	2014-02-27
				ECA NO	DATE
DESIGNED	yuanhailin/00265042	Grace_CL		03022QWC_SCHZH	
REVIEWED	wangweijie/00303684				
		VER	PART_NUMBER	SHEET 59 OF 60	
		B	0301XXXX	HUAWEI TECH CO.,LTD.	

60. Resevrd

کانال ما در تلگرام

@JahanIC

The type and specification of the components refer to the BOM

				TBD For	20140523
				ECA NO	DATE
DESIGNED	yuanhailin/00265042	Grace_CL		03022QWC_SCHZH	
REVIEWED	wangweijie/00303684				
		VER	PART_NUMBER	SHEET 60 OF 60	
		B	0301XXXX	HUAWEI TECH CO.,LTD.	